This is a digital copy of a book that was preserved for generations on library shelves before it was carefully scanned by Google as part of a project to make the world's books discoverable online.

It has survived long enough for the copyright to expire and the book to enter the public domain. A public domain book is one that was never subject to copyright or whose legal copyright term has expired. Whether a book is in the public domain may vary country to country. Public domain books are our gateways to the past, representing a wealth of history, culture and knowledge that's often difficult to discover.

Marks, notations and other marginalia present in the original volume will appear in this file - a reminder of this book's long journey from the publisher to a library and finally to you.

Usage guidelines

Google is proud to partner with libraries to digitize public domain materials and make them widely accessible. Public domain books belong to the public and we are merely their custodians. Nevertheless, this work is expensive, so in order to keep providing this resource, we have taken steps to prevent abuse by commercial parties, including placing technical restrictions on automated querying.

We also ask that you:

+ *Make non-commercial use of the files* We designed Google Book Search for use by individuals, and we request that you use these files for personal, non-commercial purposes.

+ *Refrain from automated querying* Do not send automated queries of any sort to Google's system: If you are conducting research on machine translation, optical character recognition or other areas where access to a large amount of text is helpful, please contact us. We encourage the use of public domain materials for these purposes and may be able to help.

+ *Maintain attribution* The Google "watermark" you see on each file is essential for informing people about this project and helping them find additional materials through Google Book Search. Please do not remove it.

+ *Keep it legal* Whatever your use, remember that you are responsible for ensuring that what you are doing is legal. Do not assume that just because we believe a book is in the public domain for users in the United States, that the work is also in the public domain for users in other countries. Whether a book is still in copyright varies from country to country, and we can't offer guidance on whether any specific use of any specific book is allowed. Please do not assume that a book's appearance in Google Book Search means it can be used in any manner anywhere in the world. Copyright infringement liability can be quite severe.

About Google Book Search

Google's mission is to organize the world's information and to make it universally accessible and useful. Google Book Search helps readers discover the world's books while helping authors and publishers reach new audiences. You can search through the full text of this book on the web at http://books.google.com/

Google

Digitized by Google

Digitized by Google

W3.5²: I Adj. Gen.

ARTILLERY CIRCULAR I, SERIES OF 1893.

COURSE

OF

INSTRUCTION FOR ARTILLERY GUNNERS.

MODERN GUNS AND MORTARS

ADOPTED IN THE UNITED STATES LAND SERVICE,

THEIR CARRIAGES, PROJECTILES, FUZES, AND SIGHTS.

BY

THE LATE CAPTAIN CHARLES C. MORRISON, ORDNANCE DEPARTMENT,

AND

CAPTAIN JAMES C. AYRES, ORDNANCE DEPARTMENT.

PREPARED FOR PUBLICATION UNDER DIRECTION OF

LIEUTENANT-GENERAL JOHN M. SCHOFIELD, COMMANDING U. S. ARMY,

BY

LIEUTENANT COLONEL TASKER H. BLISS,

AID-DE-CAMP.

ADJUTANT-GENERAL'S OFFICE.

1895.

WASHINGTON:
GOVERNMENT PRINTING OFFICE.
1895.

Digitized by Google

Digitized by Google

W 3.5² : I

35 412SU XL 3891
10/06 31150-119 US

Digitized by Google

FIG. 79

DISTINCTIVE COLORS FOR PROJECTILES.

U. S. ARMY.

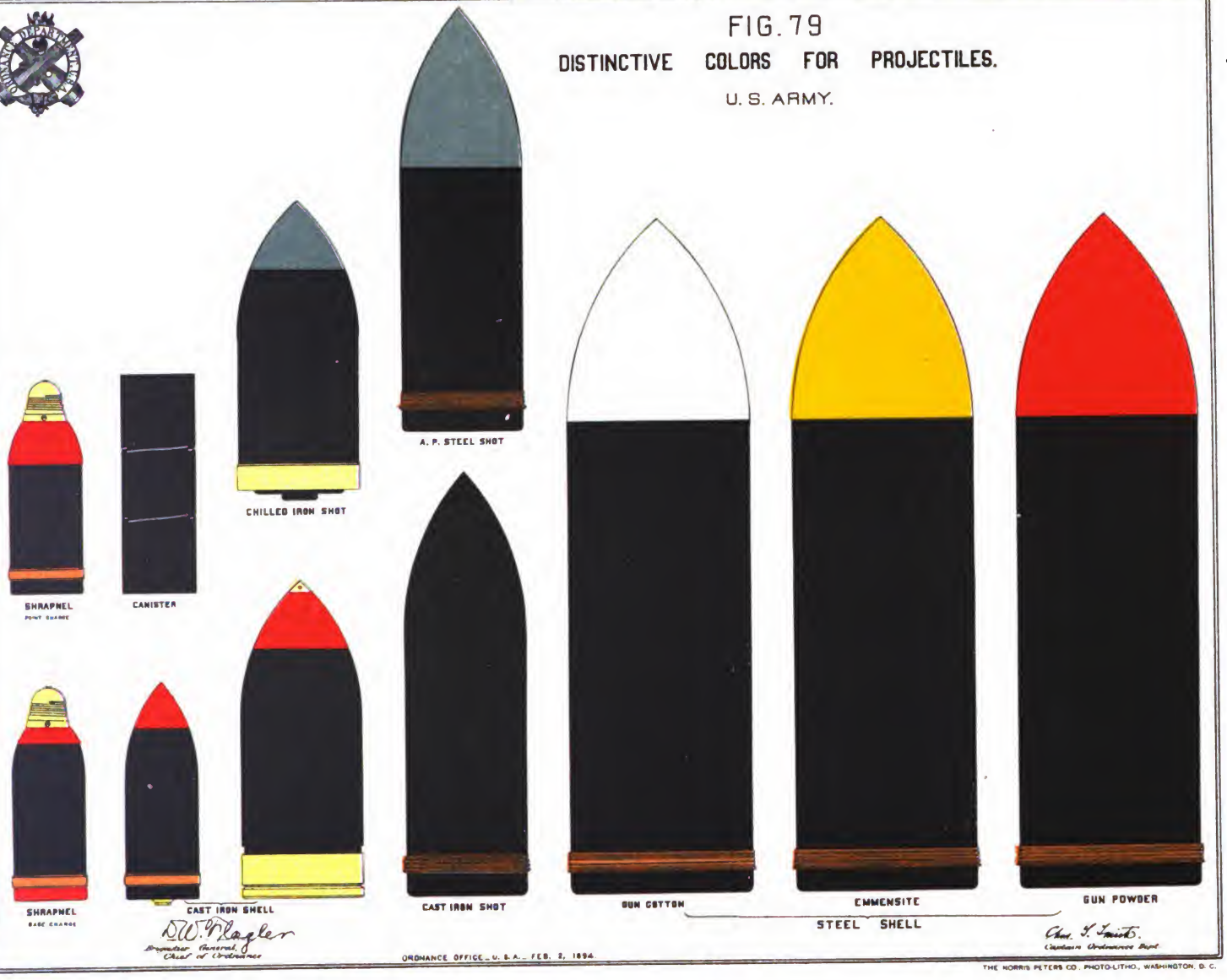

D. W. Flagler
Brigadier General,
Chief of Ordnance

Chas. S. Smith
Chairman Ordnance Board

ORDNANCE OFFICE, U. S. A., FEB. 2, 1894.

THE NORRIS PETERS CO., PHOTO-LITHO., WASHINGTON, D. C.

Digitized by Google

ARTILLERY CIRCULAR I, SERIES OF 1893.

COURSE

OF

INSTRUCTION FOR ARTILLERY GUNNERS.

MODERN GUNS AND MORTARS

ADOPTED IN THE UNITED STATES LAND SERVICE,

THEIR CARRIAGES, PROJECTILES, FUZES, AND SIGHTS.

BY

THE LATE CAPTAIN CHARLES C. MORRISON, ORDNANCE DEPARTMENT,

AND

CAPTAIN JAMES C. AYRES, ORDNANCE DEPARTMENT.

PREPARED FOR PUBLICATION UNDER DIRECTION OF

LIEUTENANT-GENERAL JOHN M. SCHOFIELD, COMMANDING U. S. ARMY,

BY

LIEUTENANT-COLONEL TASKER H. BLISS,

AID-DE-CAMP.

ADJUTANT-GENERAL'S OFFICE.

1895.

WASHINGTON:
GOVERNMENT PRINTING OFFICE.
1895.

Digitized by Google

Digitized by Google

ARTILLERY
CIRCULAR
I.
SERIES OF 1893.

HEADQUARTERS OF THE ARMY,
ADJUTANT GENERAL'S OFFICE,
Washington, March 27, 1895.

The following course of instruction on modern guns and mortars, adopted in the United States land service, their carriages, projectiles, fuzes, and sights, for artillery gunners, by the late Captain CHARLES C. MORRISON, Ordnance Department, and Captain JAMES C. AYRES, Ordnance Department, is published for the use and information of all concerned.

BY COMMAND OF LIEUTENANT-GENERAL SCHOFIELD:

GEO. D. RUGGLES,
Adjutant General.

Digitized by Google

Digitized by Google

PREFACE.

This work was undertaken by the late Capt. C. C. Morrison, Ordnance Department, in compliance with instructions of the Chief of Ordnance, dated February 11, 1893.

These instructions stated that "it should be kept in view that the subjects are to be discussed in such a way as to bring it within the comprehension of an intelligent soldier. The pamphlet should be brought within the closest limits consistent with *clearness*, and the language should be simple and direct, and wherever it is possible to illustrate the text by drawings, it should be done. It is intended that all guns, carriages, etc., of adopted pattern, should be now described, while those of patterns not yet adopted can be subsequently added."

At the time of his death, Captain Morrison had practically completed the text of the introductory chapter on cannon and artillery carriages and had made first drafts in more or less complete form of the descriptions of the machine guns, mountain guns, the 3.2-inch rifle, the 3.2-inch gun carriage proper, the 8-inch rifle, the 8-inch barbette carriage, the 12-inch mortar, and the 12-inch spring-return mortar carriage. But little had been done upon the illustrations, and none of them had been completed.

Upon succeeding to the duties of Captain Morrison as Recorder of the Board of Ordnance and Fortification, I was directed to finish the work. In doing this I have endeavored, as far as possible, to carry out Captain Morrison's plans.

Captain Morrison prepared an outline of the proposed work, which was approved, but, owing to the rapid development of seacoast carriages and other ordnance *matériel* since the inception of the work, it has been found necessary to somewhat extend this plan.

In compiling the book, material has been obtained from the pamphlets of the Gatling Gun Company, the Pratt & Whitney Company, and the Hotchkiss Ordnance Company, from the Ordnance Notes, the reports of the Chief of Ordnance, and the reports of the Board of Ordnance and Fortification.

I have also received valuable assistance from Gen. D. W. Flagler, Chief of Ordnance; Col. A. R. Buffington, commanding Rock Island Arsenal; Lieut. Col. J. P. Farley, commanding Frankford Arsenal; Maj. I. Arnold, commanding Watervliet Arsenal; Maj. F. H. Phipps, President of the Ordnance Board; Maj. J. W. Reilly, commanding Watertown Arsenal; Capt. F. Heath, commanding Sandy Hook Proving Ground; Capt. C. Shaler, Capt. C. S. Smith, Capt. D. M. Taylor, Capt. R. Birnie, Capt. L. L. Bruff, Capt. W. Crozier, Lieut. C. B. Wheeler, and the late Lieut. F. P. Peck, and I desire to offer my acknowledgments and thanks to these officers.

I am especially under obligations to Capt. Frank Baker for a description of the 12-inch barbette carriage; to Capt. W. W. Gibson, for a description of the 12-inch gun-lift carriage, and to Lieuts. C. L'H. Ruggles and Lawson M. Fuller for descriptions of fuzes and

Digitized by Google

sights, since, in a great measure, I have embodied their work on those subjects in this book without material alteration.

I am also much indebted to Mr. C. H. Tompkins, jr., my draftsman, who, in addition to his careful work on the illustrations, greatly assisted me in reading drawings, discerning changes and correcting errors.

It should be remembered that many of the subjects treated of are in a transition state. I have endeavored to obtain the latest information, but have possibly failed in many instances, and I would therefore request those who use this work to kindly inform me of any material errors or omissions they may discover.

J. C. AYRES,
Captain, Ordnance Department, U. S. Army.

Digitized by Google

TABLE OF CONTENTS.

Page.

INDEX 265

LIST OF ILLUSTRATIONS 9

CHAPTER I.—CLASSIFICATION OF CANNON AND ARTILLERY CARRIAGES.

CANNON, 13. ARTILLERY CARRIAGES, 19.

CHAPTER II.—MACHINE GUNS.

THE GATLING GUN, 27. THE 10-BARREL GATLING GUN, CALIBER .30, MODEL 1893, 29. Adjustment of the gun, 31; directions for taking the gun apart and assembling, 31; component parts of the 10-barrel gun, caliber .30, 32. 10-BARREL GATLING GUNS, CALIBER .45, 33. 5-BARREL GATLING GUN, 35. Directions for taking gun apart, 36; adjustment of the lock system, 37. FEED APPARATUS. Positive feed, 37; cases used in old-model guns, 37; Bruce feed case, 38; Accles feed case, 38. PRECAUTIONS IN THE USE OF GATLING GUNS, 39. GATLING GUNS IN SERVICE, 40. MOUNTINGS FOR GATLING GUNS, 40. CARRIAGE FOR THE MODEL OF 1883 GATLING GUN, 42. THE CAVALRY CART, 43. CARRIAGE FOR MACHINE GUNS, MODEL 1890, 44. NOMENCLATURE. Carriage, 44, 47; mount for Gatling gun, model 1890, 47; limber, 47. THE GARDNER GUN, 48. To operate the Gardner gun, 50; to dismount the Gardner gun, 50; to dismount the lock of the Gardner gun, 53; the carriage and mount for the Gardner gun, 53; the limber for the Gardner machine gun, 55; weight of the gun, carriage, etc., 56; nomenclature of improved Gardner machine gun, caliber .45, 56.

CHAPTER III.—MOUNTAIN ARTILLERY.

THE HOTCHKISS 2-POUNDER GUN, 57. Action of the breech mechanism, 58; the carriage, 58; accessories and equipments, 58; the ammunition, 65; to dismount breech mechanism, gun, and carriage, 66; cleaning and care of gun, 69; transportation of the 2-pounder mountain gun in rough country, 69; measurements and weights of Hotchkiss 2-pounder mountain gun, 73; firing table for Hotchkiss 2-pounder mountain gun, 75. THE HOTCHKISS 12-POUNDER, 75. Action of breech mechanism, 76; the carriage, 76; the limber, 76; the ammunition, 83; fuzes, 86; the combined time and percussion fuze, 86; to use the time device, 87; weights, measurements, etc., of Hotchkiss 12-pounder gun, carriage, and pack, 88; firing table for Hotchkiss 12-pounder mountain gun, 89. NOTES ON PACKING, 90.

CHAPTER IV.—FIELD CANNON AND CARRIAGES.

THE 3.2-INCH FIELD GUN, 93. Breech mechanism, 93; weights, dimensions, etc., of the 3.2-inch rifle, 100; range table for 3.2-inch B L. rifle, steel, with common shell, 101; range table for 3.2-inch B. L. rifle, steel, with shrapnel, 103; fuze scale, 103; carriage for 3.2-inch B. L. rifle, 105; limber for 3.2-inch rifle, 112; weights of the gun, gun carriage, limber, and equipment, 119; caisson for 3.2-inch B. L. rifle, 119; weight of caisson and equipment, 123; combined forge and battery wagon for 3.2-inch rifles, 123; weights of forge and battery wagon and equipment, 127. THE 3.6-INCH FIELD GUN, 127. Weights, dimensions, etc., of the 3.6-inch rifle, 128; carriages for the 3.6-inch B. L. rifle, 128. THE 3.6-INCH FIELD MORTAR, 131. Weights, dimensions, etc., of the 3.6-inch mortar, 132; carriage for the 3.6-inch B. L. field mortar, 135.

Digitized by Google

CHAPTER V.—Siege Cannon and Carriages.

The 5-Inch B. L. Siege Rifle, 139. Weights, dimensions, etc., of the 5-inch siege rifle, 140; carriage for 5-inch B. L. siege rifle, 143. Limber for Siege Guns, 149. The 7-Inch B. L. R. Siege Howitzer, 150. Weights, dimensions, etc., 155; carriage for the 7-inch B. L. R. siege howitzer, 155. 7-Inch B. L. R. Siege Mortar, 156. Weights, dimensions, etc., of the 7-inch mortar, 160; carriage for the 7-inch B. L. R. siege mortar, 160.

CHAPTER VI.—Seacoast Cannon—8, 10, and 12 Inch—and Carriages.

The 8-Inch B. L. Rifle, 165. Action of the breech mechanism, 172; care of the gun, 172; weights, dimensions, etc., 173; carriages for the 8-inch B. L. rifle, 174; fixed or nondisappearing barbette carriage, 174; traversing gear, 177; elevating mechanism, 177; elevation indicator, 178; projectle hoist, 179; the Buffington-Crozier disappearing barbette carriage, 179. 10-Inch B. L. Rifle, 183. Model 1888, 183; model 1888, modifications I and II, 184; carriages for the 10-inch B. L. rifle, 189; the nondisappearing barbette carriage, 189; the Buffington-Crozier disappearing carriage for 10-inch rifle, 189; the Gordon disappearing barbette carriage, 189; the modified Gordon disappearing carriage for 10-inch rifle, 190. 12-Inch B. L. Rifle, 195. Model of 1892, 195; carriages for the 12-inch B. L. rifles, 197; the barbette carriage for 12-inch B. L rifle (nondisappearing), 197; the top carriage for 12-inch B. L. rifle, 197; the chassis and racer, 198; the base ring, 198; the elevating mechanism, 198; traversing gear, 201; shot hoist, 201; care of the carriage, 201; the gun-lift carriage for the 12-inch B. L. rifle, 201; the carriage, 202; the throttling bars, 202; the hydraulic connections and action of valves, 205; the elevating mechanism, 207; the traversing mechanism, 207. The 12-Inch B. L. Rifled Mortars. The 12-inch B. L. steel mortar, model 1890, 207; the 12-inch B. L. cast-iron mortar, hooped with steel, 213; provisional range table for 12-inch B. L. mortar, cast-iron, steel hooped, 214; carriage for the 12-inch B. L. R. mortars, 215; care of the carriage, 222.

CHAPTER VII.—Projectiles.

Projectiles for 3.2-Inch Rifles. Shell, 223; shrapnel, 224; canister, 226. Projectiles for the 3.6-Inch Rifle and 3.6-Inch Mortar, 227. Projectiles for Siege Cannon, 227. Projectiles for Seacoast Guns, 227. Projectiles for Seacoast Mortars, 228. Colors for Projectiles, 231.

CHAPTER VIII.—Fuzes.

The Frankford Arsenal Base Percussion Fuze "A." Model 1893, 233; model 1893, modified, 234. Frankford Arsenal Base Percussion Fuze "B," Model 1894, 235. Frankford Arsenal Base Percussion Fuze "C," Model 1894, 236. Frankford Arsenal Point Percussion Fuze for Hotchkiss Mountain Rifle, Caliber 1.65, 237. Frankford Arsenal Point Combination Fuze, 15 Seconds, 238. Frankford Arsenal Combination Fuze, 28 Seconds, Model 1892, 241.

CHAPTER IX.—Sights.

Sights for Hotchkiss Mountain Gun, Caliber 1.65, 243. Sights for Hotchkiss Mountain Gun, Caliber 3-inch, 243. Sights for Field and Siege Guns, 244. Sights for the 3.2-Inch Rifle, 245. Sights for 3.6-Inch and 5-Inch B. L. Rifles, 246. Sights for the 3.6-Inch B. L. R. Mortar, 246. The Gunner's Quadrant, 249. To use the quadrant, 250. The Pointing Arc, 251. Use of the instrument, 251; correction in range table for 3.2-inch B. L. rifle, 252. Sights for the 7-Inch B. L. R. Howitzer. The rear sight, 255; the front sight, 256; method of use, 256. Sights for the 7-inch B. L. R. Mortar, 259. Sights for Seacoast Guns, 259. Front Sights (side) for 8, 10, and 12 Inch B. L. Rifles, 260. Rear Sights (side) for 8, 10, and 12 Inch B. L. Rifles, 260. Experimental Horizontal Limb for Seacoast Rifle Sights, 263.

Digitized by Google

LIST OF ILLUSTRATIONS.

Fig.		Page.
1.	General drawing of a built-up gun	14
2.	General drawing of the slotted-screw breech mechanism	16
3.	General drawing of an axle	19
4.	General drawing of a wheel	21
5.	Gatling gun, 10-barrel	27
6.	Gatling gun, 10-barrel. Development of cam groove and firing mechanism	29
7.	Positive feed for Gatling gun	37
8.	Accles feed for Gatling gun	39
9.	Gatling gun mounted on carriage for machine guns, model 1890	45
10.	Gardner gun and breech mechanism	48
11.	Wooden carriage for Gardner gun	51
12.	Oscillator apparatus for Gardner gun	54
13.	Hotchkiss 2-pounder mountain gun and breech mechanism	59
14.	Carriage for Hotchkiss 2-pounder mountain gun	61
15.	Hotchkiss 2-pounder mountain gun and carriage, with pole attached	63
16.	Cartridge case and canister for Hotchkiss 2-pounder mountain gun	65
17.	Shell for Hotchkiss 2-pounder mountain gun	66
18.	Point-percussion fuze for Hotchkiss shell, caliber 1.65	66
19.	Pack saddle for Hotchkiss 2-pounder mountain gun	67
20.	Folding pole for Hotchkiss 2-pounder mountain gun carriage	70
21.	Ammunition pack saddle for Hotchkiss 2-pounder mountain gun	71
22.	Ammunition pack for Hotchkiss 2-pounder mountain gun	73
23.	Hotchkiss 12-pounder mountain gun and breech mechanism	77
24.	Carriage for Hotchkiss 12-pounder mountain gun	79
25.	Limber for Hotchkiss 12-pounder mountain gun	81
26.	Shell for Hotchkiss 12-pounder mountain gun	83
27.	Shrapnel for Hotchkiss 12-pounder mountain gun	84
28.	Canister for Hotchkiss 12-pounder mountain gun	85
29.	Elswick combination fuze for Hotchkiss 12-pounder mountain gun	86
30.	3.2-inch breech-loading rifles	95
31.	Breech mechanism of 3.2-inch breech-loading rifle	97
32.	Carriage for 3.2-inch breech-loading rifle	107
33.	Brake for 3.2-inch breech-loading rifle carriage	109
34.	Elevating device for 3.2-inch rifle carriage	111
35.	Limber for 3.2-inch breech-loading rifle (elevation)	113
36.	Limber for 3.2-inch breech-loading rifle (plan)	115
37.	Caisson for 3.2-inch breech-loading rifle	121
38.	Combined forge and battery wagon for 3.2-inch breech-loading rifle	125
39.	3.6-inch breech-loading rifle	127
40.	Breech mechanism of 3.6-inch breech-loading rifle	129
41.	3.6-inch breech-loading mortar	131
42.	Breech mechanism of 3.6-inch breech-loading mortar	133
43.	Carriage for 3.6-inch breech-loading mortar	137
44.	5-inch breech-loading rifle	140
45.	Breech mechanism of 5-inch breech-loading rifle	141
46.	Carriage for 5-inch breech-loading rifle	145
47.	Limber for siege guns	147
48.	7-inch breech-loading rifle howitzer	150
49.	Breech mechanism of 7-inch breech-loading rifle howitzer	151
50.	Carriage for 7-inch breech-loading siege howitzer	153

Digitized by Google

Fig.		Page.
51.	7-inch breech-loading rifled mortar	159
52.	Breech mechanism of 7-inch breech-loading rifled mortar	157
52*a*.	Locking pin for 7-inch breech-loading rifle mortar	159
53.	Carriage for 7-inch breech-loading rifle mortar	161
54.	8-inch breech-loading rifles	167
55.	Breech mechanism of 8-inch breech-loading rifle	169
56.	Barbette carriage for 8-inch breech-loading rifle	175
56*a*.	Elevation indicator for seacoast gun carriages	178
57.	Buffington-Crozier disappearing carriage for 8-inch breech-loading rifle	181
58.	10-inch breech-loading rifles	185
59.	Breech mechanism of 10-inch breech-loading rifle	187
60.	Gordon disappearing carriage for 10-inch breech-loading rifle	191
61.	12-inch breech-loading rifles, model 1888	193
62.	12-inch breech-loading rifle, model 1892	195
63.	Barbette carriage for 12-inch breech-loading rifle	199
64.	Gun-lift carriage for 12-inch breech-loading rifle	203
65.	Hydraulic connection and valve action of gun-lift carriage for 12-inch breech-loading rifle	206
66.	12-inch breech-loading rifled mortar	209
67.	Breech mechanism of 12-inch breech-loading rifled mortar	211
68.	Carriage for 12-inch breech-loading rifled mortar (elevation)	217
69.	Carriage for 12-inch breech-loading rifled mortar (plan)	219
70.	Shell for 3.2-inch breech-loading rifle	223
71.	Frankford Arsenal shrapnel for 3.2-inch breech-loading rifle	224
72.	Electrically-welded shrapnel for 3.2-inch breech-loading rifle	225
73.	Canister for 3.2-inch breech-loading rifle	226
74.	High-explosive projectile for 7-inch breech-loading rifled mortar	227
75.	Cast-iron solid shot for 8-inch breech-loading rifle	228
76.	Forged-steel shot for 8-inch breech-loading rifle	228
77.	Service shell for 12-inch breech-loading rifled mortar	229
78.	Deck-piercing shell for 12-inch breech-loading rifled mortar	231
79.	Distinctive colors for projectiles	*Frontispiece.*
80.	Frankford Arsenal point-percussion fuze for Hotchkiss 2-pounder mountain gun	238
81.	Frankford Arsenal base-percussion fuze "A"	233
82.	Frankford Arsenal base-percussion fuze "A," modified	235
83.	Frankford Arsenal base-percussion fuze "B"	235
84.	Frankford Arsenal base-percussion fuze "C"	236
85.	Frankford Arsenal point-combination fuze, 15 seconds	239
86.	Front sight for Hotchkiss 12-pounder mountain gun	243
87.	Rear sight for Hotchkiss 12-pounder mountain gun	244
88.	Front sight for 3.2-inch breech-loading rifle	245
89.	Rear sight for 3.2-inch breech-loading rifle	247
90.	Gunner's quadrant	249
91.	Demonstration of principle of gunner's quadrant	250
92.	Pointing arc	253
93.	Rear sight for 7-inch breech-loading rifled howitzer	257
94.	Front sight for 7-inch breech-loading rifled howitzer	256
95.	Axial sights for 10-inch breech-loading rifle	259
96.	Front sights for 10-inch breech-loading rifle	260
97.	Rear sights for 10-inch breech-loading rifle	261
98.	Experimental horizontal limb for 10-inch breech-loading rifle sights	263

Digitized by Google

EXPLANATION OF ILLUSTRATIONS.

In the plates contained in this book, the names of the important parts of the objects illustrated will be found marked upon the part itself, or with leading lines to indicate the part named.

A scale is placed upon each illustration, and for convenience in reading differences of level, the heights of important parts are given in a vertical scale on the side of the drawing.

The materials used in the construction of guns, carriages, etc., are shown by the following symbols:

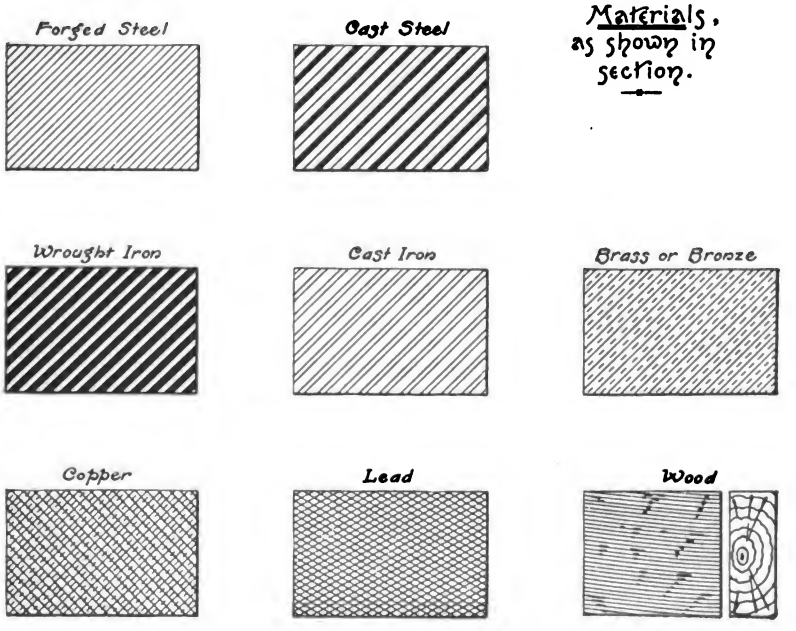

Digitized by Google

Digitized by Google

MODERN GUNS AND MORTARS.

CHAPTER I.

CLASSIFICATION OF CANNON AND ARTILLERY CARRIAGES.

CANNON.

Cannon are artillery weapons not capable of being carried and fired in the hands, from which projectiles are thrown by the expansive force of gases.

They are either made with smooth bores or are rifled. Spherical projectiles are usually fired from the former; oblong projectiles from the latter.

Modern cannon are all rifled.

To obtain greater weight than can be had in the spherical form, projectiles are made oblong. That these may not tumble in flight, a motion of rotation about the longer axis must be given them. This is accomplished by the rifling of the cannon.

Cannon are of three classes:

First. Guns, or those cannon in which the length of the bore is relatively great in comparison with the caliber.

Second. Mortars, or those cannon in which the length of the bore is small in comparison with the caliber.

Third. Howitzers, or those cannon whose relative length and caliber place them between the other two classes.

Cannon for the United States land service are classified, according to their use, into mountain artillery, field artillery, siege artillery, and seacoast artillery.

They may also be classified into those in which the powder charge is inclosed in a metallic cartridge case and those using a cartridge bag. The former are subdivided into machine guns, revolving cannon, and rapid-fire guns.

Cannon are made of a single piece or they are built up of two or more pieces.

Built-up cannon are of two general classes:

The first class is composed of steel forgings, in which a tube extends through the length of the bore, and has superposed concentric forgings of as great length as can be economically utilized, and of such thickness as may be determined, in part, by economy of construction and, in part, by conditions giving the best utilization of the elastic strength of the component metal.

The second class is constructed on an inner tube with the remainder of the wall composed entirely, or in part, of a rectangular, circular, or ribbon form of wire.

Built-up cannon are designed to be so constructed that the elastic qualities of the metal may be best utilized. No portion should be strained beyond its elastic limit, either at rest or during firing. As the greatest strain is at the bore, this portion of the wall is compressed, when at rest, up to its elastic limit, and when under the stress of the powder gases it is extended nearly or quite up to its elastic limit for extension.

Digitized by Google

The elastic limit of a metal is that point beyond which, if it be strained either by extension or compression, permanent deformation will take place. Hence, there is a corresponding limit in each direction. If a metal be carried by a stress beyond either limit, and successive higher strains be imposed, such permanent deformation will take place as finally to pass the ultimate strength and result in rupture.

In a cannon made of a single piece of homogeneous steel, in its natural condition, with no initial compression or extension, the metal at the bore can be stretched, by the expansion of the powder gases, only within the limit of elasticity for extension before permanent deformation takes place. If, however, the cannon of the same exterior dimensions be made of concentric tubes properly assembled, so that the metal at the surface of the bore is contracted to its elastic limit for compression, this surface will, in firing, stand a corresponding stress necessary to stretch it back to the normal condition of the first cannon, and thereafter it may be further strained so as to utilize the elastic qualities for extension. Hence, a built-up cannon may be made stronger, tangentially, than a cannon of the same dimensions composed of a single piece having the same qualities of metal.

The tangential strength of a cannon is the resistance which it offers to being torn apart in a plane parallel to its axis.

Service cannon, excepting machine guns, are generally of the built-up, forged-steel type. These are composed of an inner tube with superposed jacket and hoops.

The tube, ordinarily made in one piece, constitutes the wall of the bore from breech to muzzle.

A jacket is a cylindrical forging concentric with the tube, extending from the breech to a plane beyond the trunnions.

A hoop is a cylindrical forging concentric with the tube, superposed upon the jacket or tube. The row of hoops in the cylindrical part, extending from the breech to in front of the trunnions, nearest the tube, is known as the "A" row. If there be a second row it is called the "B" row.

The first row of hoops over the tube in the conical part, in front of the trunnions, is known as the "C" row; the second row as the "D" row.

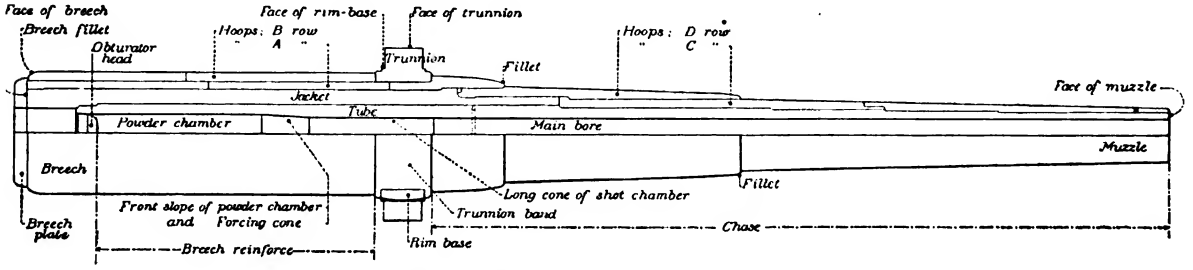

Fig. 1. General Drawing of a Built-up Gun.

The breech of the gun is the mass of metal behind the bottom of the bore, extending to the face of the breech. The face of the breech is the rear terminal plane of the cannon perpendicular to the axis of the bore. The rounding surface connecting the face of the breech with the cylinder is the breech fillet.

The breech reinforce is the portion of the body of the gun in front of the breech and in rear of the trunnion band.

The trunnion band is the hoop located at about the center of gravity, by which the connection is made with the mounting.

Digitized by Google

The trunnions are cylinders designed to rest in the bearing surfaces of the mounting, the axes of which are perpendicular to the axis of the bore, and ordinarily in its plane. They connect the gun with the carriage and transmit the strain from one to the other. The faces of the trunnions are the end planes perpendicular to the axes of the trunnions.

The rimbases are the masses of metal uniting the trunnions with the cylinder of the trunnion band. The end surfaces, in planes perpendicular to the axes of the trunnions, are the faces of the rimbases.

The center of gravity of a cannon is in a plane nearly coincident with the vertical plane containing the axes of the trunnions.

The preponderance is the excess of the moment of weight on one side of the trunnions over the counterpoising moment of the weight on the other side. It is practically measured by sustaining the surplus weight at the point at which the preponderance is desired, when the cannon is supported freely upon its trunnions, by a vertical strut, one end of which rests upon platform scales and the other end abuts against the underside of the cannon in the plane at which the preponderance is to be determined.

The chase is the portion of the cannon in front of the trunnion band.

The fillets are moldings uniting surfaces of different diameters.

The front end of the cannon is known as the muzzle. Its terminating plane, perpendicular to the axis, is the face of the muzzle.

The bore is the hollow portion in the center of the gun in front of the breech mechanism. It is composed of the main bore, the powder chamber, and the shot chamber. The main bore is the rifled portion through which the projectile travels.

The powder chamber is composed of the main cylindrical part, ordinarily larger than the main bore, and of the front slope of the powder chamber, which is a conical surface uniting it with the shot chamber.

The shot chamber is the seat of the projectile in front of the powder chamber. It is composed of the cylindrical portion, the short cone at the seat of the forcing band, known as the forcing cone, and the long cone from the bottom of the rifling uniting the cylindrical part with the main bore, designed to make the deformation of the rotating band on the projectile gradual. In some cannon there is only the long cone.

The rifling is the form given to portions of the wall or surface of the bore for the purpose of imparting to the projectile, in its passage through the bore, a motion of rotation about its longitudinal axis. In the United States service this consists of a series of helical grooves of either uniform or increasing twist. Those portions of the bore depressed below its original surface are called grooves. The portions between the grooves are called lands. The motion of rotation is imparted by the soft metal band on the projectile. In its forward motion the band is so deformed by the lands as to leave portions filling the grooves between the lands, which, acting as studs in keyways, constrain the projectile to make one complete revolution about its axis for each turn of the grooves.

By the twist of the rifling is meant the inclination of the helical groove at any point to the axis of the piece. The twist is either uniform or increasing. When uniform, it is expressed by the distance, measured parallel to the axis of the bore, in which the helix makes one complete turn. When increasing, it is measured at any point by considering the inclination uniform at that point for one turn of the bore. The twist of the rifling is usually expressed in calibers of the piece. Thus in the 3.2-inch field gun, it is said to increase from one turn in 50 to one turn in 25 calibers.

The caliber of a rifle is the diameter of the bore at the top of the lands. It is the minimum diameter of the rifled portion of the bore.

The length of the bore is the distance from the face of the obturator head, at the bottom of the powder chamber, to the face of the muzzle.

Digitized by Google

The travel of the projectile is the distance from the base of the projectile, in its seat, to the muzzle of the gun.

The charge consists of the powder and the projectile.

The powder charge is, in all guns excepting machine guns, revolving cannon, and rapid-fire guns, inclosed in one or more silk or serge bags, and is separate from the projectile. In guns of greater caliber than 8 inches it is inclosed in two or more bags; in other cannon in one bag. In the above excepted cannon the charge is inclosed in a metallic case known as the cartridge case, which also supports the base of the projectile.

The projectile is the missile thrown from the gun.

Projectiles are of four classes—shot, shell, shrapnel, and canister.

Shot are projectiles not designed to carry bursting charges. They may be of cast iron for ordinary battering purposes, or they may be of armor-piercing steel for penetrating the sides of armored vessels.

Shells are projectiles in which there is a cavity capable of holding a bursting charge to be ignited by a fuze, ordinarily upon impact. They are used both against animate and inanimate objects.

Shrapnel are projectiles with a thin wall inclosing a number of balls or small projectiles and a bursting charge, which is ignited at a desired distance from the gun by a combination fuze. They are designed for use against animate objects.

Canister are projectiles with a thin wall, inclosing a number of small projectiles, but with no bursting charge. They are designed for use against animate objects near the muzzle of the cannon, the case being ruptured by the propelling charge.

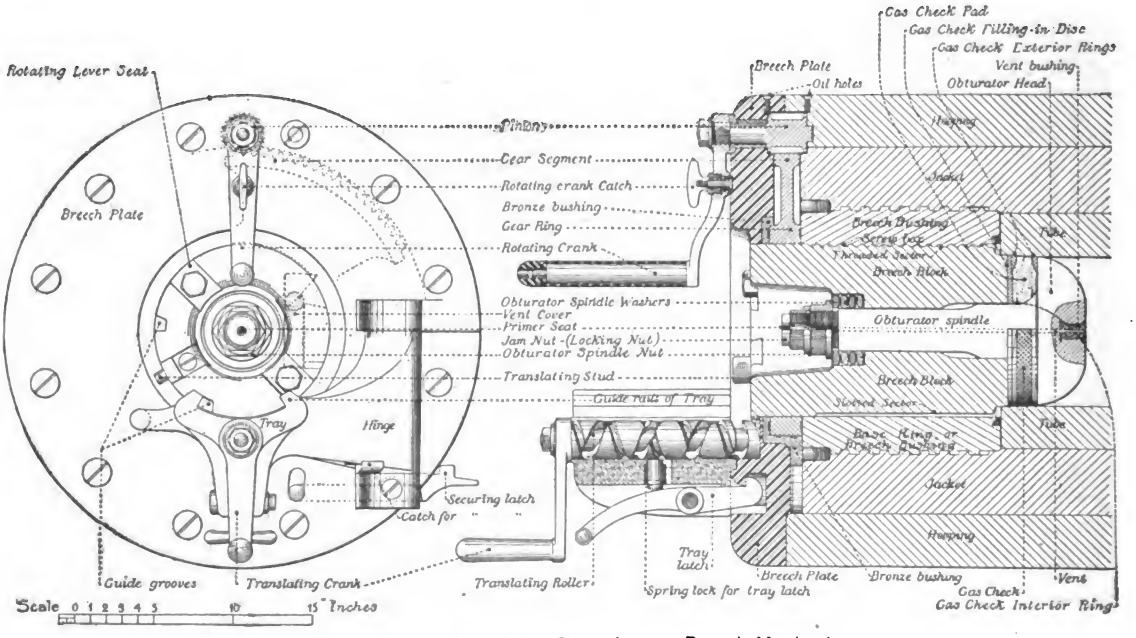

Fig. 2. General Drawing of the Slotted-screw Breech Mechanism.

The fuze is a device for igniting the bursting charge in the projectile at a desired point. It may be a percussion fuze, which acts when the projectile strikes, or a time fuze, which is caused to act after a determined interval subsequent to the ignition of the propelling charge; or it may be a combination fuze, which is one embodying both the devices above described.

The primer is the device for igniting the propelling charge.

Digitized by Google

There are two general classes of primers—field-gun friction primers, slipped into the vent without screw thread; and obturating primers, screwed into the axial vent. The latter is made so that the front portion is, by firing, expanded against the wall of the vent so as to act as a gas check. Obturating primers may be ignited by electricity or by friction.

By the density of loading is meant the ratio of the weight of the powder charge to the weight of a volume of distilled water at a temperature of 39.2 F. which will fill the powder chamber between the projectile and the obturator head.

By the sectional density of the projectile is meant the relation between the weight of the projectile and the square of its diameter, and is expressed by the fraction whose numerator is the weight in pounds and the denominator the square of the diameter in inches.

The muzzle velocity (f. s.) is the distance in feet which the projectile would travel in a second of time if it moved with a uniform velocity equal to that which it has at the muzzle of the gun.

The breech mechanism is located in the breech immediately in rear of the powder chamber. It is a device for so closing the bottom of the bore as to prevent the escape of gases through the breech during firing, yet capable of being easily removed for loading.

The breech mechanism, or breech fermeture of a cannon consists of the breech plug or device for closing the bottom of the bore and its associate parts; the power device for operating the plug; the supports for the plug when removed from the bottom of the bore; the safety devices for preventing the premature firing of the cannon, and the firing mechanism.

With the exception of machine and rapid-fire guns, all cannon in the United States land service have what is known as the slotted-screw form of breech fermeture, and are fired by primers inserted in the vent.

The breech plug and associate parts are the breechblock and the obturator. The latter is composed of the mushroom or obturator head, gas check, obturator spindle washers (or springs) and nuts, vent, and vent bushing. In cannon using metallic ammunition there is also an extractor for removing the cartridge case.

The breechblock is a cylindrical metal plug threaded on the outside from its front face nearly to its rear face, with alternating segments of 45 or 60 degrees of the thread slotted away, leaving smooth portions that will pass, without interference, corresponding threaded portions in the seat of the breech of the gun.

The obturator is the device for preventing the escape of gas about the breechblock of the cannon.

The obturator head consists of a forging of steel, resembling a mushroom in shape, with a head having a rounded front surface and a spindle, which passes through a cylindrical cavity in the axis of the breechblock.

The gas check consists of a plastic disk of asbestus and tallow, inclosed in a canvas cover protected by metal cups or rings in front and rear. It is mounted upon the obturator spindle, between the obturator head and the face of the block.

The obturator-spindle nuts are nuts screwed upon the rear end of the obturator spindle, designed to secure the obturator in the block. The obturator-spindle washers are disks mounted upon the obturator spindle between the base of the block and the obturator nuts. Their office is to reduce the friction between the nuts and the base of the block in order that the gas check and obturator may not turn in rotating the block. In field and siege cannon they are replaced by a spring.

The vent is a channel for the passage of the gases from the primer to the powder charge. In seacoast and siege cannon it is a cylindrical hole through the obturator spindle, the front portion of which terminates in the axis of the bore, and is protected by a copper vent bushing,

Digitized by Google

which has its seat in the front face of the obturator head. The rear portion is threaded to receive the primer.

In the older models of field guns the vent is not in the block. It is bored in a cylinder of copper called the vent bushing, which is screwed into its threaded seat drilled radially in the body of the gun from the outer surface to the powder chamber. In the 1890 and subsequent models the vent is similar to that found in siege and seacoast cannon.

The extractor is a hook actuated by the motion of the breechblock to withdraw the cartridge case.

The breechblock engages in threads in the screw box.

The screw box is the surface by which the thrust upon the obturator from the powder gases is transmitted to the body of the cannon. It is a threaded surface, cut upon the interior of a bushing ring, or in the rear end of the jacket, at the breech of the cannon, and slotted to correspond to the threaded portion of the block. By it the thrust on the block is transmitted to the jacket.

The power devices are, in field and siege cannon, the lever handle and an ordinary block handle, the former to rotate the block and the latter to assist in withdrawing it.

In seacoast cannon the power is applied by two cranks: First, the rotating crank with its associate parts; second, the translating crank connected with the translating roller.

The rotating crank consists of a straight hand piece, the lever arm, and a stud, upon which is mounted a pinion which engages in a gear segment, all so constructed as to rotate the block through an arc equal to the threaded portion between two slotted segments of the screw box.

The translating roller consists of a threaded bar supported in the tray and rotated by a crank mounted at its rear extremity. A stud affixed to the breechblock engages in the thread of the translating roller, whereby the block is withdrawn after it has been rotated by the rotating crank.

In field and siege cannon the support for the breechblock, when withdrawn from its seat, is a cylindrical ring supported at one side by a hinge pin passing through ears on the ring. It is called the carrier ring.

The hinge pin is a cylindrical bar which works in a vertical seat in the body of the gun. The ears of the ring are pinned to it. The ring, supporting the block, revolves with it.

In seacoast ordnance the block, when withdrawn, rests in a bracket tray or console, in which the translating roller has its bearing, which tray is supported by a vertical hinge pin with bearings in ears on the breech plate.

The breech plate is a cover for the rotating gears. It is screwed to and covers the face of the breech.

The carrier ring in field and siege cannon, and the tray in seacoast cannon, have latches which secure them to the breech of the gun until the block is entirely withdrawn. The seacoast ordnance has, in addition, a catch which holds the tray when the block and its support are swung about the hinge pin so as to uncover the screw box for the entry of the charge.

The safety devices, in field, siege, and seacoast ordnance, consist in, first, a metal vent cover automatically operated by the motion of the block, which prevents the insertion of the primer until the block is entered and rotated to position; second, a means of locking the rotating lever so that it may not be turned until it is released by hand.

The action of the slotted-screw fermeture is as follows: After the piece has been fired the locking device is released; the power device is rotated, by which the block is turned through 45 or 60 degrees corresponding to the arc of the threaded sector; the threaded portions of the block are thus brought opposite the smooth segments of the screw box, and

Digitized by Google

the threaded portions of the screw box opposite the smooth sectors of the block. The latter is then drawn directly to the rear upon or into its support; the latter is unlatched automatically and the support is swung about the axis of the vertical hinge pin, carrying the block with it, so that the screw box, in prolongation of the bore, is entirely uncovered; the charge is then inserted and the breech closed by reverse movements; the primer is inserted in the vent and the piece fired.

ARTILLERY CARRIAGES.

Artillery carriages are of two classes:

First. Gun Carriages.

Second. Those designed for the transportation of material or ammunition necessary in the utilization of guns.

These carriages are classified in the same manner as the cannon for the use of which they are designed.

Gun carriages are vehicles so designed as to enable cannon to be transported thereon or fired therefrom. Those for the seacoast ordnance are fixed in position.

The field carriages are: The gun carriage and its limber, the caisson and its limber, and the combined forge and battery wagon with its limber.

The limber is the two-wheeled vehicle by which the front bearing is given to the after carriage, and to which the draft horses are attached.

Ammunition for the immediate use of the gun is ordinarily transported in the gun-carriage limber.

The caisson is a vehicle for the transportation of a reserve supply of ammunition.

The combined forge and battery wagon is a vehicle for the transportation of tools necessary in making repairs of ordnance material in the field.

Field carriages may be of wood or metal. The more recent forms have the major portion of their parts of steel. The wooden carriages still in the service are those formerly issued with machine guns and with muzzle-loading cannon.

The component parts of a metal field-gun carriage are: The axle, axle plate, wheels, flasks, and brakes, and their associate parts.

In wooden carriages the axle plates are replaced by axle bodies and the flasks by cheeks and stocks.

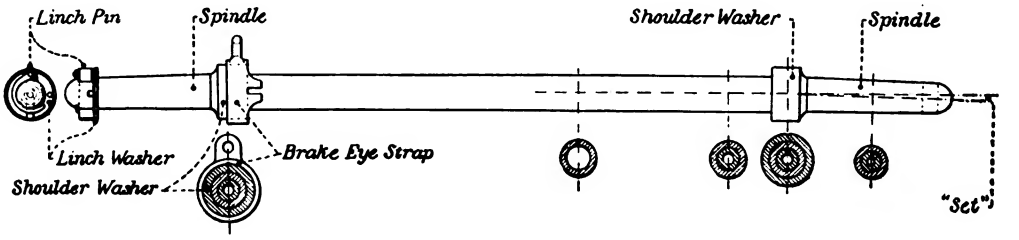

Fig. 3. General Drawing of an Axle.

The axle is the metal bar by which the weight and stresses from firing of the cannon are transmitted to the wheels. It is generally made hollow with nearly solid ends or spindles. The ends are frustums of a cone with rounded top, at the bases of which are cylindrical shoulder washers, which offer inside support against lateral thrust of the wheels. These conical portions are called spindles or axle arms.

The axle arm is inclined slightly downward, called the hollow, and sometimes forward, forming the lead. Axles of recent metal carriages are given only the hollow.

Digitized by Google

The position of the axis of the arm with respect to that of the axle is called the set of the arm.

By the hollow the cross strain upon the spoke of a dished wheel is lessened upon uneven roads It also tends to throw the upper portion of the rim without the vertical, thus assisting in throwing mud from the carriage.

The effect of the lead is to diminish the cross thrust upon that spoke which is opposite the portion of the rim in front of the lowest point when the latter strikes a stone or other obstacle in the road. It relieves, to some degree, the pressure on the linchpin and also aids in changing direction.

The axle plates are horizontal, strengthening metal plates grooved to fit the axle and encompassing it, clamping it top and bottom. They extend in front and rear of the axle and are riveted and bolted together. They serve not only to reenforce the axle but also as a basis of support for the flasks of the carriage.

Connected with the axle and axle plates are the linchpins, linch washers, shoulder washers, and the brake straps and eyes.

Linchpins are metal pins passing through the outer ends of the spindle. They are designed to retain the wheels upon the axle.

Washers are flat, metal plates, usually circular in form, with a hole through the center. Their office is to distribute strains over a large surface, and between moving parts to reduce friction on the surfaces they separate.

Linch washers are washers between the linchpin and the outer end of the nave box. They are designed to distribute the thrust against the linchpin over a greater surface of the nave box, and to reduce the friction.

Shoulder washers are flat rings of metal shrunk upon the axle at the inner end of the spindle. They are designed to sustain the inward thrust of the wheels. In recent carriages they are forged shoulders upon the axle.

Brake straps and eyes are metal rings or straps shrunk upon the axle or shoulder washers with lugs from their upper side, in which is pierced an eye, through which the clevis bolt for attaching the brake passes.

In wooden carriages the axle body replaces the axle plates. It is a heavy rectangular piece on top of the axle, which rests in a seat on its underside. Its ends are protected by axle bands, which are straps encompassing the axle, and the ends of the axle body, preventing the splitting of the latter and aiding in the connection of the axle with the body.

The cheeks are connected with the body by understraps, which are U-shaped bands which encompass the axle and suspend it from the cheeks, to which the straps are bolted. The connection with the stock is made by the axle strap, which is a suspension band bolted to the stock and encompassing the axle and axle body.

The wheels are the ground support of the carriage when unlimbered, and the means of transportation of the weight by rolling friction. They are composed of the rim, spokes, and naves.

The rim is the outer circle of the wheel, made up of segments called fellies, which are doweled together. It is protected from wear and bound together by the tire.

The tire is a metal band encompassing the rim, upon which it is placed by shrinkage, and to which it is attached by bolts passing through the fellies.

The spokes are radial struts supporting the rim, which transmit the weight from the nave to it. The inner ends are tenoned into the nave, and the outer ends into the fellies. The length of the tenon is made less than that of its seat in order that the strain may be taken upon the shoulder rather than upon the end of the spoke.

Digitized by Google

The nave is the central portion of the wheel in which the axle arm has its bearing. It serves as a seat for the inner ends of the spokes and is lined by a nave box, which is a casting machined to fit the axle arm. It receives the pressure from the axle arm and transmits it through the nave and spokes to the rim.

In recent forms of metal carriages the wheel is of the Archibald pattern. The rim is composed of eight wooden fellies doweled together, protected by a steel tire, which is bolted through each felly. There are sixteen wooden spokes and a metal nave. The latter is composed of a nave-box casting fitting the spindle with an inner flange sustaining the spokes on the inside and an outer flange, in a separate piece, assembled upon the nave-box casting and brought to a bearing against the spokes by a hexagonal nut on the outer end of the nave box, and by eight bolts through from the inner flange of the nave box to the outer flange. A stay screw is halved into the nave box and the hexagonal nut prevents the latter from unscrewing. These Archibald wheels are, in all field carriages, of uniform size—57¾ inches high.

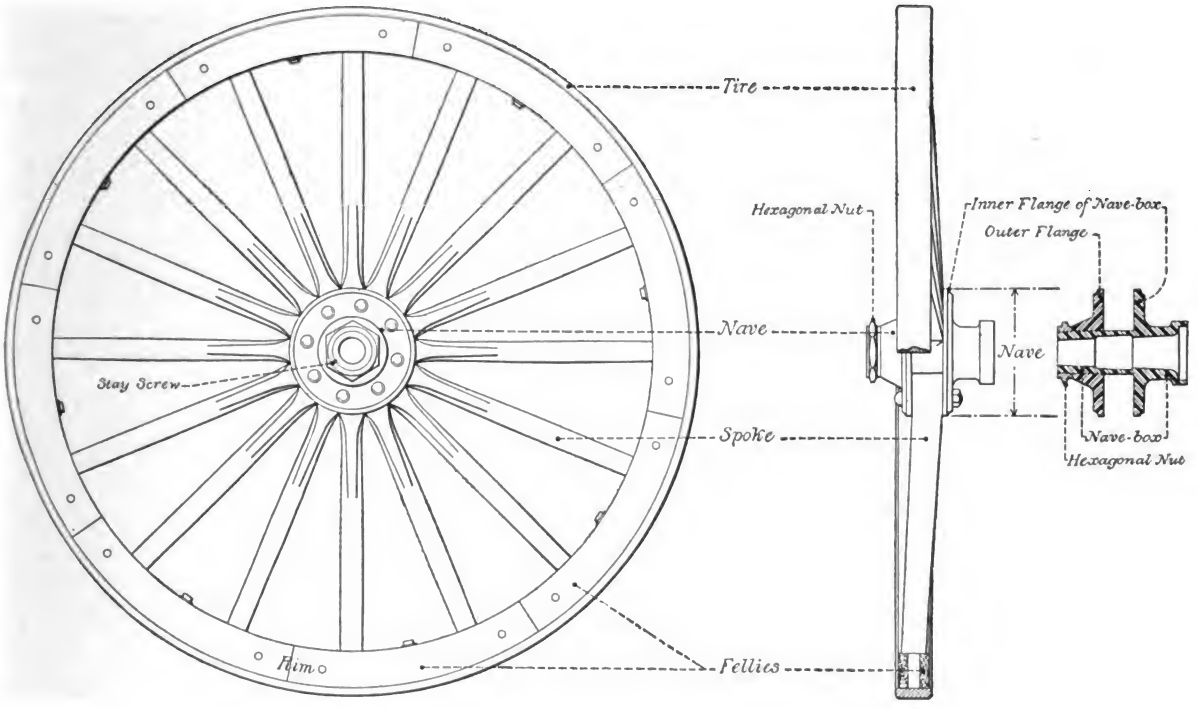

Fig. 4. General Drawing of a Wheel.

In wooden carriages the naves are of wood, lined with a cast metal nave box. The body of the nave is protected from splitting by two brow bands and two end bands.

Brow bands are thin metal bands shrunk upon the nave in front and rear of the inner ends of the spokes.

End bands are similar bands shrunk about the outer and inner ends of the nave (see fig. 32).

The flasks of a metal carriage are the side pieces bolted and riveted to the axle plates, upon which, in suitable trunnion beds, the cannon rests and which, prolonged, form, together with the stiffening transoms, the hollow beam constituting the trail. Besides its function of aiding, as a strut, in resisting the shock of firing, and of offering a third point of support for

Digitized by Google

the gun carriage when separate from the limber, it is used as a reach for connecting it with the limber, thus constituting a four-wheeled vehicle for transportation purposes.

Mounted upon the flask, and connected therewith, are the following supplementary parts: The transoms, trunnion plates, cap-squares, chin bolts, and key bolts with their keys, lunette, trail plate, pointing rings, trail handles, wheel guards, implement eye and ear plates, ear-plate keys and chains, implement turn-buckles, and elevating device.

The transoms are stiffening plates connecting the two flasks for the purpose of giving to the hollow beam which they form additional rigidity.

Trunnion plates are plates bolted upon the top of the flasks, shaped with semicircular beds to fit the trunnions. They give additional bearing surface and distribute the stress from the trunnion beds over the upper surface of the flasks.

Cap-squares are metal covers of the trunnions, shaped to them, and designed to retain them in their beds. They are secured in place by chin and key bolts.

The chin bolt is a heavy bolt with hook-shaped head mounted in the trunnion plate and passing through the rear arm of the cap-square. The latter is retained in place by being drawn under the chin to a bearing against the body of the bolt, the front arm being rotated over the key bolt and keyed in place. It is secured from loss by a chain, the other end of which is fastened to the flask by an eye pin.

The key bolt is an eyebolt mounted in the trunnion plate and passing through the front cap-square arm, which latter is retained in place by passing through the eye a key on the end of a cap-square chain, the other end of which is secured by an eye pin to the flask or to the cap-square.

In recent models of carriages the chin and key bolts are replaced by two heavy eyebolts similar to the key bolt, and the key chains are attached to a common eye pin secured in the cap-square.

The lunette is a heavy plate of iron or steel encompassing the lower end of the trail, to which it is shaped, and having through its extreme end a circular hole, which fits over the pintle hook on the limber. It serves as a link between the front and rear carriages.

In metal carriages the lunette and trail plate are usually in one piece.

The trail plate is a flat plate of steel or iron riveted to the lunette and bolted on top of the lower end of the trail. It serves as an assembling plate, upon which the pointing rings are mounted.

In wooden carriages the pointing rings are rings mounted upon the trail plate, in which is inserted the trail handspike for lifting the trail from the ground in the operation of pointing the gun, and in maneuvering when unlimbered. The rear ring is ordinarily free to rotate upon a horizontal rivet passing through ears projecting from its base plate, upon which it is supported.

The base plates of the pointing rings are secured to the stock by bolts passing through the trail plate, stock, and lunette.

In recent metal carriages the handspike is riveted in a socket which is hinged to the front handspike attachment plate and is hooked under the rear attachment catch pin.

The trail handles are two heavy metal U-shaped handles bolted on the side of the lower end of the trail. They are used in lifting the trail in limbering and unlimbering.

The wheel guards are rectangular metal plates on either side of the trail designed to protect it from wear by the limber wheels.

Ear plates are small plates having two upturned lugs, through eyes in which a small bolt, known as the ear bolt key, passes. They are usually mounted upon the stock for the purpose of making a keep for implements.

Digitized by Google

An eye plate is a small metal plate having a hole therein, through which a ring or link may be passed. It at times also has an eye pin riveted to it for the same purpose. It is generally secured to the larger body by bolts or rivets and offers the means of attachment of the link or ring to such body.

Eye pins are bolts, pins, or rivets terminating in an eye.

Eye and ear-plate key chains are small chains securing the keys to the trail and preventing their loss.

A turn-buckle, as used on gun carriages, consists of a small metal collar, with a wing from one or both sides, loosely riveted upon a stud about which it revolves. It is designed to retain a hasp in position.

The elevating device is an attachment by which the cannon is made to revolve upon horizontal trunnions. It is usually permanently mounted in the trail.

In wooden carriages the flasks are replaced by two cheeks and the stock.

The cheeks, in wooden carriages, are two pieces on either side of the upper end of the stock, upon which the trunnions of the cannon rest, and by which the stress is transmitted to the axle and trail. Upon them are mounted the trunnion plates, cap-squares, key bolts, chin bolts, chin and key bolt washers, handspike-washer hooks, and **D** rings.

All are similar in principle to the like parts in the metal carriages. The means of attachment differ on account of the difference in material.

The handspike-washer hook is a small hook mounted upon a washer bolted to the cheeks. It is designed to offer a support to the ring near the smaller end of the handspike.

D rings are rings shaped like the letter **D**. Those mounted on the cheeks of wooden carriages usually have the upright of the **D** retained by eye staples so that they may rotate through a limited arc.

In wooden carriages the stock is composed of a single piece, or of two pieces doweled together, having one end resting upon the axle body, supported by the axle band and by through bolts assembling it with the cheeks. It is rectangular in cross section between the cheeks, and tapers from a point slightly in rear thereof to the trail plate. Upon it, in addition to like parts for metal carriages, are mounted the lock chain, prolonge hooks, and rammer and sponge stops.

The lock chain is of iron and is secured to the trail by an eye plate, through which a heavy bolt, known as the lock-chain bolt, passes. It is used upon wooden carriages as a brake device. It has at its end a toggle and at intermediate points rings in which the toggle engages.

A toggle is a small crossbar secured at its middle section to the end of a chain or cord. It is intended to be passed through a link or ring against the perimeter of which its ends rest, forming a means of attachment or stop. In lock chains it is thrust through an intermediate ring after the chain has been passed about the rim of the wheel.

The prolonge hooks are **Z**-shaped hooks mounted on the top of the trail, to which they are secured by bolts, rivets, or nails. They serve as a means of attachment for the prolonge rope for drawing the carriage by hand.

The rammer and sponge stops are small angle plates secured on the side of, or under the trail against which the ends of the rammer and sponge abut, so as to prevent slipping of these implements.

Upon some wooden carriages rondelles are used. They are heavy cast washers, sometimes with tenons extending into wood, mounted on the assembling bolts between the cheeks and stock. They distribute the strain on the bolt over a greater area.

The remaining parts mounted upon the stock are similar in principle to those on metal carriages though differing in form and in manner of attachment.

Digitized by Google

The brakes are attachments intended to check the motions of the carriage by transferring the rolling friction of the wheels into sliding friction.

The component parts of a limber are: The axle, wheels, hounds, fork, splinter bar, footboards, footboard brackets, pintle hook, ammunition chest, pole, pole prop, doubletree, and singletree (see figs. 35 and 36).

The axle and wheels are, in the main, similar to the same parts for the carriage.

The hounds form the side rails of the framework for the support of the ammunition chest. They extend from the splinter bar beyond the axle to the rear of the rear face of the chest.

The fork constitutes the middle longitudinal bar of the framework supporting the ammunition chest, connecting the splinter bar with the axle, and transmitting the traction power from the horses to the latter. At its rear end it gives a bearing for the pintle hook and at its front end a support for the pole.

The splinter bar is a front crossbar connecting the hounds. It is bolted to them and the fork. The horses by which the carriage is drawn are attached directly to it or to doubletrees connected with it. In wooden carriages it is usually protected from splitting at its ends by bands, as also in its central part at the points where the trace hooks are attached.

Footboard brackets are supports parallel to the hounds, on which the footboards rest and to which they are bolted.

Footboards are boards resting upon the brackets in front or rear of the ammunition chests for the support of the feet of the cannoneers seated upon the ammunition chests for transportation.

The pintle hook is a heavy hook extending from the rear of the limber in prolongation of the fork, upon which the lunette of the gun carriage is placed in transportation. The latter is retained in place by a pintle-hook key passing through an eye in the pintle hook, and secured against loss by a chain, one end of which is secured by an eye washer bolted to the rear end of the fork in metal carriages, and by an eye bolted on the axle body of wooden carriages.

The ammunition chest is a box resting upon the framework of the limber in which is carried the ammunition for the service of the gun. Its interior is subdivided by partitions according to the nature of the ammunition. The front or rear side or top is hinged so as to give access to the interior of the box, and is secured from opening by a turn-buckle. On each side of the top are handles or arms for the protection of the cannoneers from contact with the wheels. The corners and edges are protected and reenforced by metal corner pieces and angle plates.

The pole is a long bar attached to the carriage in the socket of the fork and extending to the front beyond the horses. It is intended as a means of guiding the carriage, backing it, and of checking its forward motion. It is supported by means of a pole yoke near its forward end, which is connected by straps with the collars of the horses.

The pole prop is a strut for the support of the pole when not sustained by the horses. It is permanently attached at one end to an eye on the underside of the splinter bar and retained temporarily at the other end, during transportation, by a hook or chain.

In metal carriages the framework of the limber, constituting the side rails, hounds, fork, and footboard brackets, is of angle irons riveted together. In some cases, as in wooden carriages, the ammunition chests are of wood, protected at their corners and angles by angle plates. In others the chests are of sheet iron or steel.

The caisson is a four-wheeled vehicle for the transportation of ammunition. It is composed of the limber and the caisson proper.

The limber is similar to that provided for gun carriages.

Digitized by Google

The principal component parts of a caisson are the wheels, axle, middle rail, side rails, crossbar, footboards, footboard brackets, lunette plate, and spare-wheel axle.

The combined forge and battery wagon is a four-wheeled artillery vehicle composed of a limber and battery wagon.

The limber is similar to that for other field carriages, except in details of the chest. In it is carried the forge equipment.

The battery wagon has a framework similar to the caisson except in implement attachments. Mounted upon this framework is a body containing the different tool chests.

The field mortar is mounted upon a metal carriage of such dimensions as to make it possible to be carried by hand from place to place in the trenches. It is transported on an artillery wagon.

The siege carriages are: The gun carriage and its limber, the howitzer carriage and its limber, and the mortar carriage.

Siege carriages are designed to be such that the siege cannon can be transported slowly thereon to the points where they may be needed.

Seacoast gun carriages are classified according to their employments into three general classes—barbette, casemate, and flank defense—and, according to the manner of traversing, into front-pintle and center-pintle carriages.

Center-pintle carriages are those in which the axis of rotation in traversing passes approximately through the center of gravity.

Front-pintle carriages are those in which the axis of rotation is considerably in front of the center of gravity, usually as nearly under the throat of the embrasure as possible.

Barbette carriages are those designed to be fired from over an open parapet. They are of two forms—fixed barbette and disappearing barbette carriages.

Fixed barbette carriages are those which have no greater cover during loading than in firing.

Disappearing barbette carriages are those exposed during firing and withdrawn under protection of the parapet at other times.

They are of two classes: First, those which are mounted upon a fixed platform; second, those on a movable platform.

The former have received the class name of disappearing carriages. In them the gun is mounted in trunnion supports which, under the action of recoil, are brought below the parapet when the gun is fired, where the whole remains until the gun is loaded and returned for the purpose of firing.

The second class are generally known as gun-lift mountings. They consist of a fixed barbette carriage mounted upon a lift platform, raised and lowered usually by mechanical power independent of the energy of recoil.

Casemate carriages are those mounted in a covered emplacement, and fired through an embrasure.

They are of two classes—the simple casemate carriage and the minimum-port casemate carriage. The simple casemate carriage is of the front-pintle type, the elevation being given about the axis of the trunnions.

The minimum-port casemate carriage is of the front-pintle form, in which the elevation is given, not about the axis of the trunnions, but about a horizontal axis in the carriage, as near to the middle of the rear face of the embrasure as possible. In it the top carriage and chassis, together with the gun, are elevated and depressed bodily.

Flank-defense carriages are of a nonportable type, and are designed for guns of comparatively small caliber and great rapidity of fire, which are used in the defense of torpedo fields and for flanking ditches.

Digitized by Google

Digitized by Google

CHAPTER II.

MACHINE GUNS.

Machine guns are intended for use against troops and transportation animals. They use the small-arm metallic ammunition. The machine guns adopted by the United States are the Gatling gun and the Gardner gun.

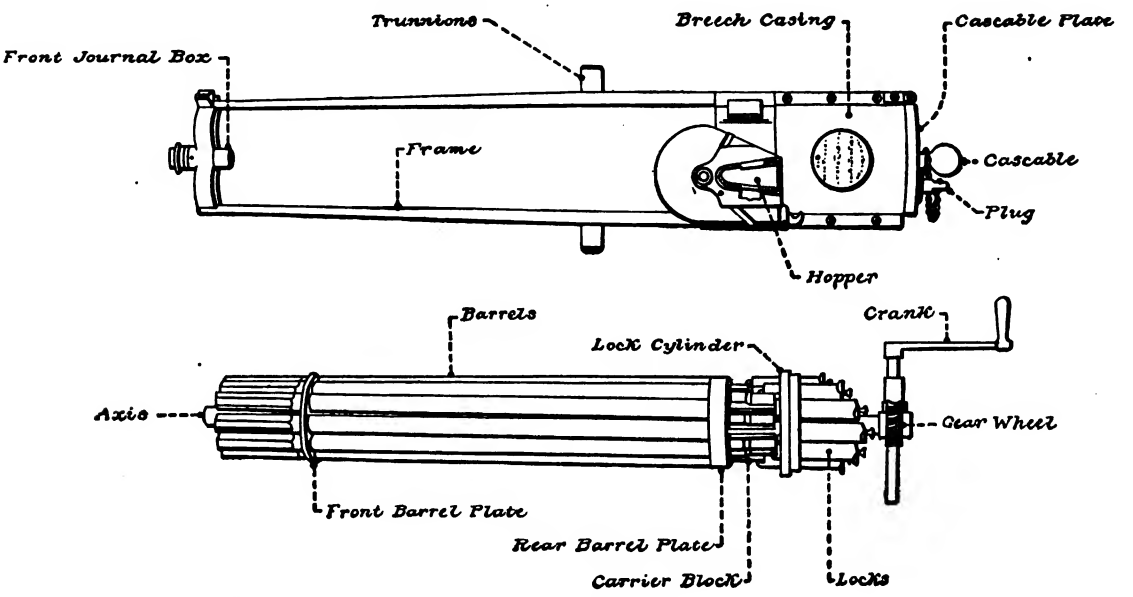

Fig. 5. Gatling Gun, 10-barrel.

THE GATLING GUN.

The Gatling gun consists of a group of small-arm rifle barrels symmetrically disposed about a central shaft and parallel thereto. Their muzzles pass through a metal plate splined upon this shaft. The rear ends are screwed into a second plate, which abuts against a shoulder on the central shaft, and is also splined to it. The barrels, barrel plate, and shaft turn together.

Behind this plate, mounted on the same shaft, is a cylinder called the carrier block, having, on its exterior, grooves or half cylinders in prolongation of the chambers of the barrels.

The cartridges are fed through a hopper to the rotating carrier block, where each rests in a groove which guides it whilst being pushed into the chamber by the lock bolt, which works in a similar groove in a second cylinder, also mounted on the central shaft immediately in rear, called the lock cylinder.

The main shaft has its front bearing in a steel frame which runs along the sides and across the front of the barrels, and its rear bearing in a diaphragm in the bronze casing, which is screwed to the steel frame.

Digitized by Google

The principal parts of the breech mechanism are inclosed in this casing, including the lock cylinder and the rotating worm and gear. The carrier block is directly under the hopper, which lies immediately in front of the casing.

Within this casing, at its rear end, is a hollow cylinder called the cam cylinder. It has on its interior surface cam grooves which guide lugs on the rear end of the lock tubes so as to cam the latter forward and backward in the revolution of the system about the central shaft. At the front end of the cam grooves is a straight surface, which backs up the lock at the instant of firing the cartridge.

On the rear end of the main shaft is a worm gear actuated by a worm on the crank shaft, perpendicular to the main shaft.

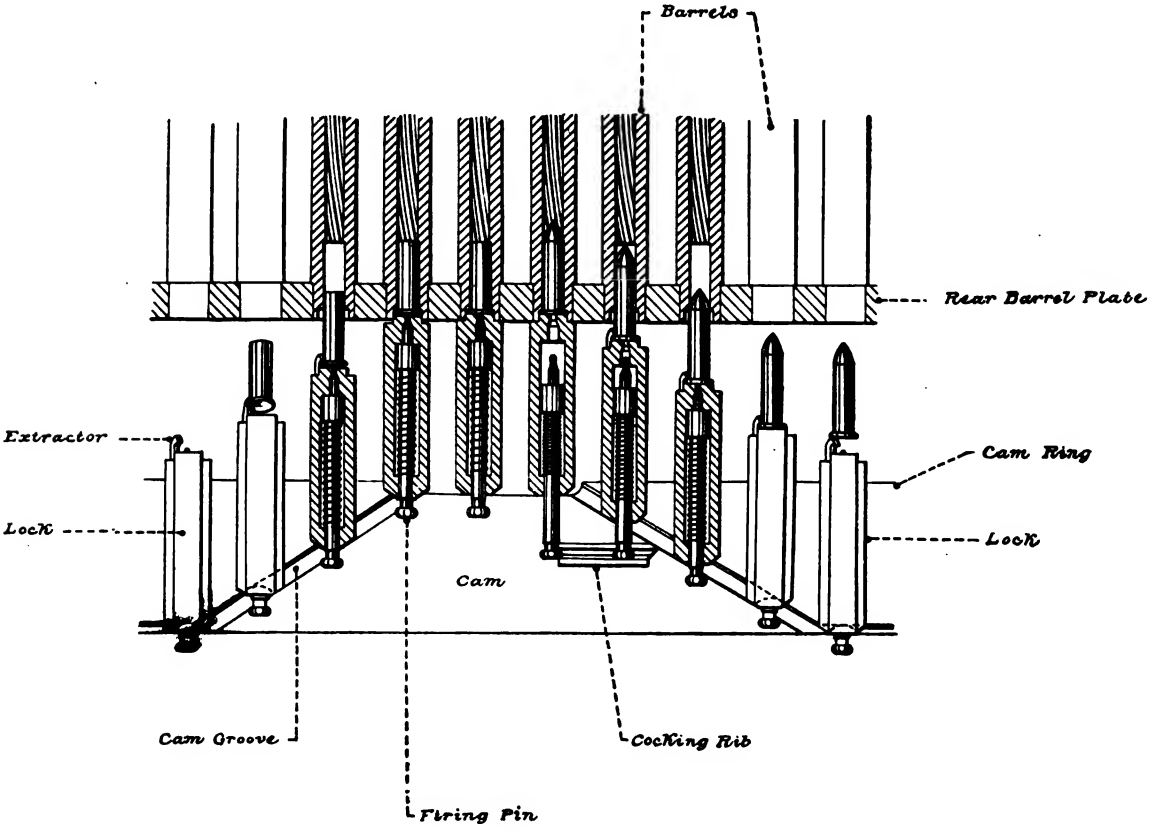

Fig. 6. Gatling Gun, 10-Barrel. Development of Cam Groove and Firing Mechanism.

In operating the gun one man turns this crank shaft; the system of barrels is thereby rotated together with the attached parts. The cartridges, fed by a second man through the hopper into the grooves in the carrier block, are pushed into the barrels by the lock bolts, and in succession are fired and the cases extracted. Each barrel receives and fires one cartridge at each revolution of the system.

There are two principal forms of Gatling guns in the service—the 10-barrel gun and the 5-barrel gun.

Digitized by Google

THE 10-BARREL GATLING GUN, CALIBER .30, MODEL 1893.

This gun consists of a rotating system of ten barrels, mounted on a two-wheeled carriage.

The principal parts of the gun are the ten barrels, main shaft, frame, carrier block, lock cylinder, locks, breech casing, diaphragm, cam cylinder, hopper, worm gear, worm and crank shaft, cascabel plate, lock plug, and the traversing and elevating lever.

The ten rifle barrels are grouped about the main shaft. A portion of each near the muzzle is hexagonal in exterior cross section to enable the barrels to be screwed into the rear barrel plate. The barrels are supported in rear by the rear barrel plate and in front by the front barrel plate, which is slipped over the muzzles and abuts against the shoulders on the barrels. Both plates are mounted on and splined to the main shaft. A key, which passes through a hub on the front barrel plate and the main shaft, prevents longitudinal motion on the shaft.

The main shaft constitutes the axis of revolution of the system. It passes through the lock cylinder, carrier block, rear barrel plate, and front barrel plate, all of which are secured to it by splines or pins, and revolve with it. Its front bearing is in a journal box in the main frame, and its rear bearing in the diaphragm. The knob of the cascabel forms an adjusting nut, and is screwed on the rear end of the shaft. By adjustment the distance between the front face of the locks and the cartridge head is regulated so that the latter will be properly supported at the instant of firing.

The frame extends along the sides of the barrels and across the muzzles. It is of steel of rectangular cross section. On it are trunnions, which connect the system with the mounting. The main shaft has its front bearing in it. The front sight is attached to it on the right side by screws. In rear there are screwed to it the crank latch, the hopper hinge block, the ball rest, and the breech casing.

The carrier block is of bronze. It is supported in front by the projection cast on the rear of the rear-barrel plate, and in rear by a projection on the front of the body of the lock cylinder. It receives the cartridges, when stripped, from the tin holder, holds them till revolved opposite and entered into the chambers, receives the empty shells after firing, and carries them from the time they are withdrawn by the extractor till ejected. It is connected with the rear barrel plate and lock cylinder by a dowel running through it. The locks are supported in it by T-shaped splines.

The lock cylinder, mounted on the main shaft in rear of the carrier block, is composed of two parts—the body and the face. The latter is secured to the body by two lock-cylinder screws. The locks rest in grooves on the surface of the cylinder and are prevented from falling out by the T on the locks engaging in corresponding recesses at the bottom of the grooves.

Immediately in rear of the lock cylinder is the rear guide nut. It is screwed on the main shaft with a right-hand thread and abuts against the lock cylinder and draws it and the carrier block to a bearing with the rear-barrel plate. It is prevented from turning by the rear guide-nut key passing through it and the main shaft.

The ten locks ride in the grooves in the lock cylinder and carrier block. The lock is a cylinder with a T-shaped spline on its underside, working in a corresponding groove in the two cylinders. It carries the firing pin and spring and the extractor. A lug on the end of the lock rides in the cam groove. A knob on the rear end of the firing pin works in the cocking switch whilst the spring is being compressed.

The extractor is a spring hook. It rests in a groove in the lock and is secured by the extractor screw, which works in an oblong hole in the extractor, permitting the latter to have a slight longitudinal motion that the hook may spring over the flange of the cartridge head.

Digitized by Google

When the extractor hook takes hold of the cartridge case it is prevented from rising by the engaging of a hook on its lower side with a corresponding slot on the lock.

The bronze breech casing incloses the lock cylinder, diaphragm, cam, cocking switch, etc. On its exterior are two longitudinal ribs, through which pass six screws, assembling it to the frame. On the right is a lug, pierced for the crank shaft and for the rear-sight stand. A second lug on the bottom is mortised for the binder box, through which the elevating and traversing lever plays.

The diaphragm is a cylinder within the casing, across its rear end, between the lock cylinder and the crank shaft. It is secured to the casing by two diaphragm screws or rivets. It supports the rear end of the main shaft and prevents the barrel system from slipping to the rear. The lock-plug sleeve is a tube passing through the diaphragm. It is attached to the rear face of the diaphragm by three lock-plug sleeve screws. It serves as a guide for the locks when inserted or withdrawn through the cascabel plate by the lock-plug hook.

The cam cylinder with its cam grooves and recoil plate is screwed to the front face of the diaphragm. On its interior surface are two helicoidal cam grooves, united by the straight recoil plate, which serve to give a reciprocating motion to the locks, in succession pushing the cartridges into the chamber, supporting the lock tube while the cartridge is being fired, and withdrawing the empty shell. The lock tube is constrained to take this motion by the lug working in the cam grooves.

The cocking switch or rib is a small arc plate, so mounted in a dovetailed groove in rear of the cam as to engage a knob on the rear end of each of the firing pins in the rotation of the system, and hold it back whilst the cam carries the lock bolt forward. The main spring is thus compressed. When the cartridge is seated and backed up by the lock bolt, the further rotation of the system carries the firing pin beyond the cocking switch and fires the gun.

In order that the barrels may be rotated without firing when desired, means are provided to withdraw the cocking switch. A shank extends from the rear of the switch, in a socket, in the end of which is mounted a small spindle, retained and limited in motion by a stud pin passing through the wall of the shank into a hole in the spindle.

A spiral spring, known as the cocking-switch spring, is mounted on this spindle, and is compressed between the spindle head and the diaphragm. The spindle extends through the diaphragm, and terminates in a head which engages in a slotted head on another spindle (or clutch), the shank of which passes through a sleeve in the cascabel plate and the cocking-switch safety knob on the rear of the cascabel plate. This clutch is fastened by a pin to a pin-plug head, which works in the center of the cocking-switch safety knob.

By drawing back the cocking-switch safety knob and turning its pin plug so that the stud pins will not enter their seats, the cocking-switch is drawn to the rear so that the firing-pin knobs are not engaged by it.

The hopper is the opening through which the gun is fed with cartridges. It is mounted by a hinge on the right side of the frame and retained by a catch on the opposite side. The cartridges, carried in thin metal strips, are passed through the mouth, resting on a shelf until well within the casing. The top of the hopper mouth is a spring plate which holds the cartridges in the grooves of the carrier block as it revolves so as to catch them, a plow-shaped wedge beyond the center withdrawing them from the metal feed strips. The strips pass out through a horizontal slit, the tongues extending down into mortises, through which they pass. On the underside of the shelf is the cartridge guard, a projection cast on the hopper, which forces out the empty shells, deflected by the plow from the extractor head. The plow is of steel, and is attached at the rear below the shelf so as to strike the cartridge-case rim and free it from the extractor.

Digitized by Google

The worm gear is on the rear end of the main shaft within the casing. It is splined to the shaft and held in place by the cascabel plate and diaphragm.

The worm, which is cut on a sleeve mounted on the crank shaft, to which it is pinned and splined, engages in the worm gear and thereby transmits the power applied to the crank so as to produce rotation of the system.

The crank shaft is mounted in the breech casing perpendicular to the main shaft in front of the cascabel plate. The crank is screwed on the right-hand end of it; it is held from turning by the crank-pin key. A collar between the casing bearing and the crank reduces the friction of rotation and keeps the crank shaft in position.

In rear of the worm, closing the bottom of the breech casing, is the cascabel plate. It has on its front face a flange which fits over the breech casing. An opening in this plate, closed by the lock plug, permits of the insertion of the locks.

The lock plug is the device for inserting or removing the locks. It rests in the lock-plug sleeve and is chained to the cascabel plate. It can be revolved in its seat so that the lock-plug hook engages the lug on the lock, which latter can then be withdrawn.

The elevating and traversing lever is a bar mounted on an axis in ears from the base of the mounting saddle. It passes through and works in the binder box in the mortise on the underside of the casing. By it the elevation and oscillation of the gun are given at will.

The rear sight is mounted on the barrel casing in the rear-sight stand—the stem has a longitudinal motion in the stand—additional friction being given by the rear-sight spring. The stand is attached to the casing by two screws, one of which passes through the spring.

ADJUSTMENT OF THE GUN.

Remove all the locks but one by the lock plug. Slacken the adjusting screw ball (knob of cascabel). Place a cartridge in the barrel corresponding to the remaining lock and turn to position of firing. Vary position of adjusting screw until slight friction on the head of the cartridge is felt when passing the firing point.

DIRECTIONS FOR TAKING GUN APART AND ASSEMBLING.

1. Bring a lock indicating mark on the rear barrel plate in line with the arrow on the hopper. Turn the handle of the lock plug to a horizontal position; draw back the lock plug, thus removing a lock. Insert the lock plug and repeat the operation till all the locks are removed.

2. Remove the adjusting ball (knob of cascabel), washer, and spring, and then turn out the cascabel-plate screws and remove the plate.

3. Drive out the worm-key pin and withdraw the crank shaft. Remove the worm.

4. Withdraw the worm of the main shaft.

5. Unscrew the hopper-hinge screws and remove the hopper.

6. Support the gun, unscrew the breech-casing screws, and withdraw the casing.

7. Unscrew the rear-guide-nut-key screw, drive out the key, take off the nut, and withdraw the cylinder and carrier block.

8. Turn out the cam screws and withdraw the cam cylinder from the front end of the casing.

9. Remove the diaphragm screws and draw out the diaphragm.

10. Hold the barrels vertically, muzzle up, and strike the rear end of the main shaft on a block; the shaft and front barrel plate will separate from the rear barrel plate. Drive out the front barrel-plate key and remove the plate. The barrels should be unscrewed from the rear barrel plate only by a skilled machinist, and only then when absolutely necessary.

Digitized by Google

COMPONENT PARTS OF THE 10-BARREL GUN, CALIBER .30.

Frame.
Trunnions.
Front sight.
Front-sight screw.
Crank latch.
Crank-latch screw.
Crank-latch washer.
Adjusting nut.
Main shaft.
Front spline.
Front-spline screw.
Rear spline.
Rear-spline screws (2).
Barrels.
Rear barrel plate.
Front barrel plate.
Front barrel-plate key.
Carrier block.
Carrier-block dowel pin.
Hopper body.
Hopper mouth piece.
Hopper mouth-piece top plate.
Hopper mouth-piece top-plate screws.
Hopper screws (3).
Hopper hinge block.
Hopper hinge screws.
Hopper hinge pin.
Hopper guide wedge.
Hopper guide-wedge screw.
Cartridge guard.
Plow.
Plow screws.
Hopper latch.
Hopper-latch spring.
Hopper-latch screw.
Lock-cylinder body.
Lock-cylinder face.
Lock-cylinder screws (2).
Rear guide nut.
Rear guide-nut key.
Rear guide-nut-key screw.
Chain and rings.
Locks, tubes (10).
Mainsprings (10).
Extractors (10).
Extractor screws (10).
Firing pins (10).
Firing-pin nuts (10).
Firing-pin-nut pins (10).
Firing-pin bushings (10).
Firing-pin-bushing screws (10).
Oscillating and elevating bar.
Oscillator nut.
Oscillating and elevating-bar pin.
Trunnion swivel.
Cap-squares (2).
Cap-square pivot pins (2).
Cap-square latches (2).
Cap-square-latch stops (2).
Breech casing.
Breech-casing screws (6).
Diaphragm body.
Diaphragm screws.
Lock-plug sleeve.
Lock-plug-sleeve screws.
Cam body.
Cam screws (3).
Recoil plate.
Recoil-plate pins.
Cocking switch.
Cocking-switch spring.
Cocking-switch-spring pin.
Cocking-switch screw.
Cocking-switch knob.
Pin plug.
Pin-plug spring.
Clutch-spindle spring.
Cocking-piece spindle pin.
Knob stop sleeve.
Pin-plug pins (2).
Clutch spindle.
Rear-sight stem.
Rear-sight stand.
Rear-sight-stand screw.
Rear-sight spring.
Rear-sight-spring screw.
Worm gear.
Crank shaft.
Crank-shaft collar.
Crank and handle.
Crank key pin.
Worm.
Worm key pin.
Cascabel plate.
Cascabel-plate screws.
Lock-plug body.
Lock-plug handle.
Lock-plug screw.
Lock-plug hook.
Lock-plug-hook screws (2).
Turntable.
Turntable pivot, bolt, and nut.
Turntable clamp, bolt, and nut.
Turntable bedplate.
Turntable-bedplate bolts and nuts (front).
Turntable-bedplate bolts and nuts (rear).

IMPLEMENTS.

Wiping rod.
Shell driver.
Rear guide-nut wrench.
Adjusting screw wrench.
Pin wrench.
T screw-driver.
Lock screw-driver.
Drift.

Digitized by Google

10-BARREL GATLING GUNS, CALIBER .45.

These guns differ from the caliber .30 gun mainly in the hopper and method of feeding. The early models used a gravity tin feed case, in which the cartridges were carried in the case. These were followed by guns in which the feed was directly from the packing boxes into a vibrating feed guide known as the Bruce feed.

These were succeeded by guns in which the hopper was adapted to the Accles drum positive feed.

These were followed by guns with the Bruce feed.

These were followed by .30-caliber positive side feed. The earlier guns had also more complicated oscillating devices.

The model of 1874, 10-barrel, .45-caliber gun differs from the .30-caliber gun in the following details:

The barrels are of .45 caliber, and are rifled with one turn in 22 inches instead of one turn in 10 inches, which is the twist of the rifling in the .30-caliber gun.

The main shaft is a little shorter, as is also the frame.

The adjusting nut is on the front end of the main shaft.

The trunnions are farther to the front.

The carrier block is shorter and grooved to fit the .45-caliber cartridge, as is also the lock cylinder.

The locks are shorter and are of a size for the .45 caliber. The casing also is a little shorter. The cams have different angles. The cocking switch can not be thrown out of action in .45-caliber guns prior to the 1883 model. The hopper, in models prior to the 1883, is adapted to a gravity feed case. In the earlier models it is placed at an angle to the vertical; subsequent to 1876 it is adapted to a feed case feeding the cartridges vertically into the carrier block. The mouth of the hopper was changed from time to time to suit the special form of feed case.

The plow is on the left side of the hopper and is assembled to it by two screws. It deflects the empty shells from the carrier block after extraction, by its point striking the upper left-hand side of the flange head of the shell, the lower left-hand edge being engaged by the extractor.

There are two cartridge guards, front and rear, screwed to the hopper and plow, respectively, to prevent the cartridge from slipping to the front or rear in dropping from the hopper. The cartridge guide is recessed in the hopper mouth piece. It is a small piece held in place by the head of one of the hopper screws to guide the cartridge in falling from the hopper.

In models prior to 1879 there is a much more complicated form of traversing cam and oscillator.

The traversing cam is a sleeve mounted on the crank and pinned thereto by a key. Two grooves are cut on this sleeve, in one of which the oscillator pin works. One of these grooves has its sides perpendicular to the axis of the sleeve and is used when no oscillator is desired. The other groove has its sides parallel, but inclined to the axis of the sleeve, and acts as a guide to the oscillator pin, thus changing the direction of the gun from side to side, and giving dispersion of fire.

The oscillator is a device which works in connection with the traversing cam for the same purpose. It consists of a metal body dovetailed transversely in the bottom of the casing, which slips freely over it. A lug on this body fits on the elevating screw, and constitutes the fixed point from which the oscillation takes place. In this body is a traversing screw covering a nut, in which is a traversing pin, which works in the traversing cam grooves

Digitized by Google

on the crank shaft. As this cam groove rides back and forth against this pin, the barrel system is constrained to oscillate. A roller on the pin reduces friction. A traversing motion, independent of oscillation, is given to the system by the traversing screw and nut.

The gun is taken apart in a manner similar to the .30-caliber gun.

The following changes have been made in the model of the 10-barrel gun (from 1874 to 1893 the caliber was .45 of an inch):

The model of 1875 differs from 1874 in the following parts:

First. The hopper and its attachments.

Second. The lock-plug hook and screws.

Third. Front face of the locks are beveled.

Fourth. The front-sight spring is omitted.

The model of 1876 differs from preceding as follows:

First. The hopper and its attachments are so changed as to use a central instead of side feed case.

Second. The carrier block is modified for the same purpose.

Third. The cam and diaphragm are held together by two screws instead of four.

Fourth. The diaphragm is screwed to the casing instead of being riveted, as in former models.

Fifth. A front cartridge guide is introduced, the plow is altered in shape so as to give a rear cartridge guide, and the rear cartridge guard is added.

Sixth. The front adjusting-screw washer screw is added to hold washer in place.

Seventh. A change is made in the bevel on the front face of the locks.

The model of 1877 differs from the model of 1876 as follows:

First. The form of hopper and attachment is modified so as to admit of more rapid ejection of shells.

Second. The worm, worm gear, and its attachments are changed so as to give quicker pitch, increasing rapidity of revolution of shaft, and hence of firing.

The model of 1879 differs from the model of 1877 as follows:

First. New elevating and pointing apparatus are introduced.

Second. The frame and casing are in consequence changed. The trunnions are moved so as to reduce the preponderance. The breech casing, instead of being slotted for an oscillator, has a lug on the underside near the rear end for the elevating-lever clamp. Hence this model can not be used with the elevating screw on the mount.

The model of 1881 differs from the previous models in the hopper being adapted to the Bruce feed case.

The model of 1883 differs from the preceding in the following particulars:

The brass breech casing is extended to the front barrel plate, as in the 5-barrel gun. The trunnions are carried on this casing 2 inches below the axial plane. An elevating arc of 180 degrees is also attached to this casing, enabling the gun to be elevated 74 degrees or depressed 78 degrees.

The main shaft terminates in the knob of the cascabel, which may be removed for the attachment of the rotating crank. The shaft has also mounted upon it a worm gear similar to the early models.

The frame is replaced by the continuous casing. The carrier block is modified to adapt it to the Accles feed case.

The locks are modified so that the point of the firing pin shall not project beyond the face of the lock tube except at the instant of firing, after which it rebounds within the face.

The extractor is made heavier, and a spring is given in order to enable it to spring over the head in its forward motion.

Digitized by Google

Under the hopper, on the left side of the breech casing, is introduced a shell guide; it is a movable piece with three wedge-shaped fingers, which support the cartridge case within the carrier block to the point of ejection.

The cam cylinder is modified so as to introduce a device permitting the cocking piece to be thrown in or out of gear, that the barrels may be rotated without cocking the main spring. This is operated by a knob projecting through the breech casing. An arrowhead indicator is used. When it points to the front the locks are in action ready for firing; when to the rear, out of action.

The hopper is changed to adapt it to the Accles drum positive feed, designed to enable the gun to be used for high-angle firing.

The worm gear, worm, and crank shaft are replaced, as in earlier models of the guns. The crank may be used on the side of the gun, giving about 800 rounds per minute, or it may be mounted directly on the rear end of the main shaft, the knob of the cascabel being removed for the purpose, giving about 1,200 shots per minute.

The cascabel plate is of new model. Sight seats are provided for two rear sights—that on the left for the 405-grain bullet, and that on the right for the 500-grain bullet. A horizontal spirit level, perpendicular to the axis of the gun, is mounted on the right-hand side.

The automatic oscillator is omitted. Dispersion is given by hand by a lever fitting into a mortise in a lug on the underside of the casing.

The model of 1889 differs from the preceding models in the introduction of the Murphy stop for rendering inoperative the cocking switch. This results in slight changes in the cascabel plate, cam cylinder, cocking switch, and cocking-switch-spring pin; the diaphragm is again used.

The casing no longer incloses the barrels—the open steel side frame is used.

The hopper is modified so as to adapt it to the straight Bruce feed.

The model of 1893 differs from the preceding in a reduction in caliber of barrels to .30-inch. Many of the parts are modified to correspond. The principles of all remain the same except the hopper—this and the carrier block are modified to adapt them to the positive side feed. The barrels are changed in caliber and rifling; the main shaft is $\frac{5}{16}$ of an inch longer; the frame is lengthened $\frac{5}{16}$ of an inch; the carrier block and lock cylinder are lengthened $\frac{5}{32}$ of an inch, and their grooves are adapted to the .30-caliber cartridge; the casing is lengthened .1 of an inch; the angles of the cam are changed. The hopper is modified for the positive horizontal feed; the sights are adapted to the .30-caliber cartridge.

5-BARREL GATLING GUN.

This gun is, in principle of construction, the same as the 10-barreled. It differs, however, in detail, in which it is much simpler.

There are but five barrels, which are inclosed in a bronze casing—the front barrel plate constitutes the front end of this casing. It has a hub that receives the front end of the main shaft, which is secured against rotation by a key passing through the hub and shaft. An antifriction ring covers that portion of the plate which enters the casing. This may be oiled through a hole in the casing, an oil groove being cut on its surface. A flange on the plate abuts against the end of the casing.

The main shaft extends from end to end of the gun. It has its front bearing in the front barrel-plate hub, and its rear bearing in the cascabel plate. The crank is applied directly to the rear end of the main shaft. The frame is dispensed with, being replaced by the casing.

The rear barrel plate, carrier block, lock cylinder, and locks are the same as in the 10-barreled gun, except that these parts are arranged for five barrels only.

Digitized by Google

The casing extends the whole length of the gun, and carries the trunnions. The front sight is on the casing.

The cascabel plate replaces the diaphragm, and is attached to the casing by a flange projecting into a corresponding recess in the breech end of the casing. It is held from turning by a screw passing through it into the cam cylinder. The rear sight slides in an undercut groove in the cascabel plate. A friction spring holds it in any position.

The adjusting nut is screwed on the extreme rear end of the main shaft. The cam cylinder is similar to that for the 10-barrel .45-caliber gun, but is attached directly to the cascabel plate. It is prevented from turning in the casing by the cam spline.

The hopper is similar to that for the 10-barreled .45-caliber gun except that it is hinged directly on the casing, the hopper hinge block being thus dispensed with. The worm gear, worm, and crank shaft are omitted, and the crank is applied directly to the rear end of the main shaft. A spline fitting in a recess in the end of the shaft prevents the crank from turning on the shaft. A spring fastened to the crank by a screw engages in a notch in the adjusting nut and prevents it from turning.

The adjusting nut on the end of the main shaft is used for adjusting the distance between the rear end of the barrels and the locks, so that the cartridge head may be properly supported without too much friction. It has on its front face notches, increasing in depth from its outer surface to the center. The crank spring is made to enter different notches for adjustment to the different thicknesses of cartridge head. On screwing up the nut the crank spring must be pressed in. Index marks on the nut and hub of the crank correspond to the usual thickness of the service cartridge head. The nut also holds the crank from turning off.

The lock plug has no hook, as the locks can be drawn out with the fingers.

The oscillator differs materially from that of the 10-barreled gun.

On the underside of the breech casing are two heavy lugs, in which is supported the traversing screw, which works with a square thread in a nut resting on the head of the elevating screw. A bronze handwheel is mounted on the left end of the traversing screw and is held by a pin from turning. By this handwheel traversing may be done independently of oscillation. The traversing screw is made hollow, and in it is a second screw having on its right-hand end a right-hand thread and on the other end a left-hand thread. Two nuts, with splines in the traversing screw, called adjusting-screw nuts, are mounted on this screw. Turning the adjusting screw causes these nuts to approach each other or separate, owing to the splines. Two springs, one on each end of the adjusting screw, are compressed between the nuts and end bearings, thus limiting the amplitude of motion. The oscillation is produced by the pressure applied to the crank in turning. The springs act as buffers.

DIRECTIONS FOR TAKING GUN APART.

1. Remove the lock plug, first turning the handle horizontally and drawing it back; then bring the several locks in succession opposite the aperture, pushing the locks out with the fingers.

2. Next remove the adjusting nut by pressing on the crank spring, and at the same time turning the nut to the left.

3. Remove the crank by pulling it to the rear.

4. Take out the cascabel-plate screws, turn the plate to the left till the two arrows coincide, and draw the plate to the rear.

5. Draw the cam directly to the rear and remove it.

6. Then open the hopper, push the barrel system to the front so as to clear the front barrel-plate key—drive it out, and draw back the system. Remove the barrels with the lock cylinders by drawing them from the casing bodily to the rear.

Digitized by Google

7. Drive out the rear-guide-nut key, unscrew the nut and draw off the lock cylinder and carrier block.

8. Take out the hopper-hinge-pin key and drive out the pin and remove the hopper. Never unscrew the barrels from the rear barrel plate unless it be absolutely necessary to replace a barrel by a new one.

To reassemble, reverse the order of the operations.

ADJUSTMENT OF THE LOCK SYSTEM.

If the system rotates very hard, and a brightening of the cartridge heads indicates too much friction of the locks on the cartridges; or if the heads of the shells swell, it indicates the necessity of adjusting the gun. To do so, remove all the locks but one, and place a cartridge in the corresponding barrel. Press the crank spring and adjust the nut until the friction against the shell head can just be felt in rotating the crank. Fire the gun and note the effect on the shell; if normal, return all the locks.

FEED APPARATUS.

The various models of Gatling guns have feed apparatus of four different kinds:

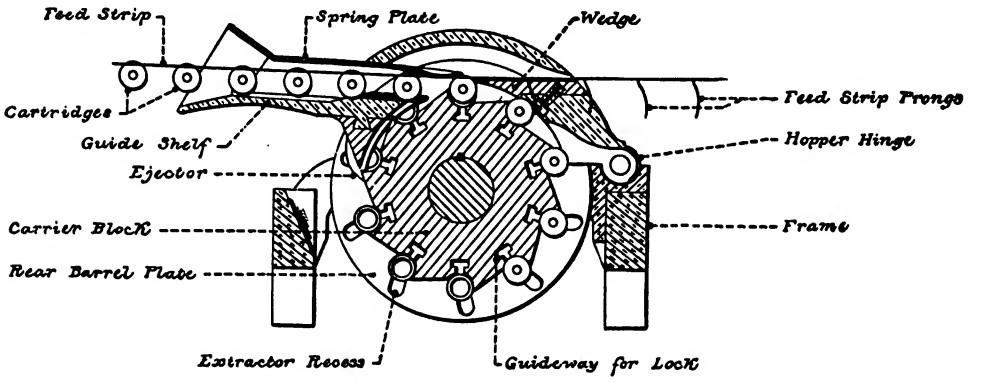

Fig 7. Positive Feed for Gatling Gun.

First. The positive feed for caliber .30, model 1893.

In these guns metal strips are used, in which each cartridge is held in place by two hook-shaped tongues and by the flange of the head projecting into a rectangular slot in the strip. The strips are about equal in width to the length of the cartridges, which are placed at intervals corresponding to the distance between the centers of the grooves in the carrier block.

The charged strip is placed horizontally in the hopper mouth with the cartridges down, heads to the rear, and pushed in until they come in contact with the edges of the grooves in the carrier block, by which they are carried forward until, by contact with the wedge, they are forced from the clasp of the prongs of the strip. The strips pass out through the narrow horizontal slit on the right, the prongs passing through corresponding mortises below. The cartridges are carried by the carrier block to the barrels.

Second. The cases used in old-model guns.

These consist of a tin body nearly trapezoidal in cross section, closed at the top by a brass cap and strengthened at the bottom with a brass band. On the left side of the case is a tin stiffening strip, to which is riveted a flat spring having at its lower end a bronze catch or shoe, which prevents the cartridges from falling from the case except when on the gun.

Digitized by Google

In placing the case on the hopper a beveled surface on the under surface of this catch strikes on a corresponding surface on the hopper, and the catch is forced back, permitting the cartridge to drop freely.

To provide for more rapid feed there is, within the case, a follower made of bronze, to which a thumb piece, working in a guide slot, is attached. By pressing on this piece the column may be pushed down more rapidly.

The case holds forty cartridges. Nearly continuous fire is kept up by replacing the empty cases with fresh ones.

Third. The Bruce feed case is a device whereby the cartridges are fed directly from the paper packing boxes.

It consists of a bronze main frame having at its lower end a single T groove or cartridge guide in which the cartridge-case head fits.

Above this groove is mounted, on a pivot near its upper end, a second guide piece with two parallel T grooves, separated by a partition corresponding to the partition in the paper boxes in which small-arm ammunition is packed. The double guide may be vibrated so as to make either groove a prolongation of the single guide groove.

At the lower end of the frame is a binding shoe with a thumbscrew, which clamps the frame to the hopper, the brackets for the clamp screw and shoe being without the hopper and the foot of the feed case within. A spiral switch spring coiled about a spindle, which pivots on its lower end, is recessed in the frame and holds the double guide at one side or the other so as to bring either groove in continuation of the lower or single groove.

A fluted roller, mounted in the hopper, catches the cartridge as it is dropped from the guide, and by rotating, drops it into the carrier block.

In using the Bruce feed case place the guide in the hopper mouth. Clamp the binding shoe. Grasp the uncovered paper box of cartridges in one hand, supporting the cartridges from falling out with the other. Hold the box vertically above the guide grooves. Lower the box until all the heads of the cartridges are engaged in the two guide grooves in two columns, corresponding to the rows in the box. Withdraw the box and continue these motions with successive boxes so long as the firing is desired.

The cartridges in one row of the double guide will feed into the single guide until that row is empty, when those in the second groove can be pivoted into line. This alternation will be kept up so long as the cartridges are fed into the double-guide grooves. Each of the grooves holds 30 cartridges.

Fourth. The Accles feed case.

This feed case is designed to give a positive feed of cartridges to the gun, and is not dependent upon gravity or springs. It is specially designed for high-angle firing.

It consists of a hollow drum, slightly longer than the cartridge. On the interior faces of the front and rear ends are guide ribs arranged in a spiral with four convolutions, so as to constitute guide grooves to support the cartridges by the bullet and case head.

Mounted on the interior lining of the hollow cylinder, as an axis of rotation, is the cartridge propeller, consisting of a sleeve, which has two disks extending from it, nearly equal in diameter to the interior of the drum. These disks are at such a distance apart as to clear, in rotation, the guide ribs. At intervals, radial slots are cut in these disks, leaving remaining the portions like fingers, between which the cartridges lie; they are thus separated from each other in the direction of the guide spirals by these fingers and radially by the ribs.

Between the disks are stiffening pieces corresponding to each slot; also projecting lugs, which engage in corresponding ones in the carrier block, so that the rotation of the latter produces a rotation in the propeller.

Digitized by Google

By the rotation of the propeller the spiral column of cartridges is continually moved forward, each radial groove feeding a cartridge in succession into the hopper, thence into the carrier block along inclined guides in the hopper, which are the prolongation of the guides in the feed case. These hopper guides are formed by flanges extending to the bottom of the grooves in the carrier block. The lower ends of these guides act as an ejector plow to throw out the empty shells.

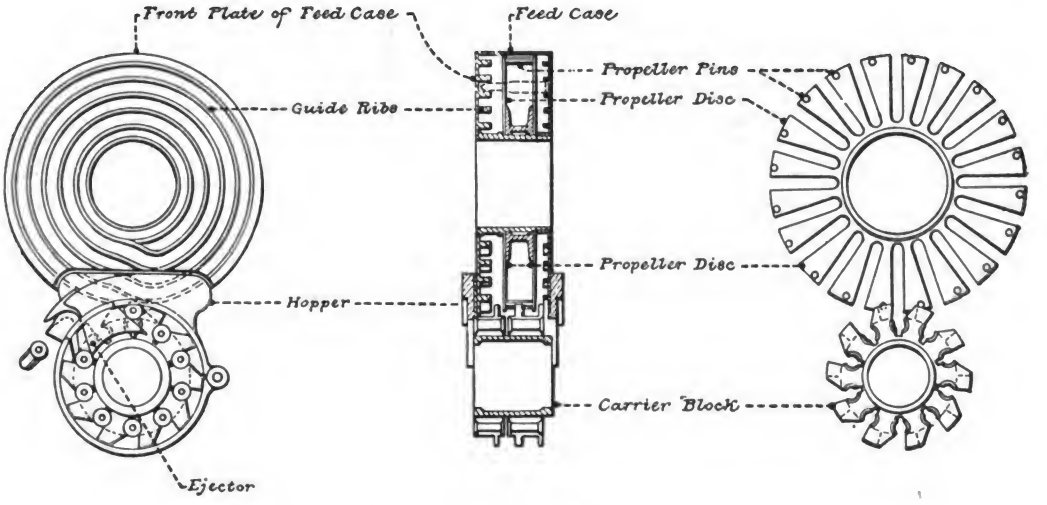

Fig. 8. Accles Feed for Gatling Gun.

The hopper on the gun is shaped to receive the drum, which is held in place by vertical flanges in front and rear of the hopper. Each flange has an undercut in which studs on the feed case fit so as to lock it in place.

The feed case is filled by dropping the cartridges in through the periphery mouth whilst the propeller is being revolved by hand.

PRECAUTIONS IN THE USE OF GATLING GUNS.

Unfired cartridges can be removed from the system by turning back the hopper and reversing the motion of the crank. This should be done after ceasing firing.

If one or more locks are disabled, the system is still operative, except that there is an interruption in firing as the unserviceable locks come opposite their barrels. The locks themselves may be removed and the corresponding cartridges recovered as they fall to the ground.

If the system jam, investigation should at once be made to ascertain the cause—turn back the hopper. If it be found that the cartridge will not enter the chamber, see if a shell has pulled apart, leaving a portion in the chamber. If such be the case, remove the remnant of shell, or failing in this, remove the corresponding lock. If the extractor be broken, and there be not time to replace it, remove the lock.

Before operating the gun see if the cocking switch is in the direction desired, and the hopper properly latched.

Never reverse the crank when the feed case is in the hopper.

All parts should be kept clean and free from sand and rust. Rust should be softened with kerosene oil, and coarse cleaning powder should not be used.

The gun should be oiled with olive or sperm oil after cleaning and should be kept covered when not in use. Partly exhausted Accles or other feed cases should be refilled before they are returned to the limber.

Digitized by Google

GATLING GUNS IN SERVICE.

There are in the land service of the United States the following Gatling guns of the models named:

Caliber.	Models.	Description.	Number in service.	Serial numbers on guns.
Inch.				
1	1866—6-barrel	Open steel side frame, straight tin feed case	50	Nos. 1–23, 26–35, 37–52.
1	1873—10-barrel	do	1	No. 121.
.50	1866—6-barrel	do	50	Nos. 1–21, 23–32, 34–44, 46–48, 50–1, 53–55.
.50	1871—10-barrel	do	9	Nos. 100 to 108.
.45	1874—10-barrel, short	do	56	Nos. 1 to 56.
.45	1874—10-barrel, long	do	8	Nos. 57–63, 105.
.45	1875—10-barrel, long	do	44	Nos. 107–146, 163–166.
.45	1875—10-barrel, short	do	4	Nos. 159–162.
.45	1876—10-barrel, long	do	19	Nos. 170–188.
.45	1877—10-barrel, long	do	1*	Nos. 191–193, 196–201, 225, and 226.
.45	1877—5-barrel, short	Bronze full length case, straight tin feed case	17	Nos. 203–218 and 190.
.45	1878—10-barrel, long	Open steel side frame, straight tin feed case	16	Nos. 225, 226, 228, 229, 231–242.
.45	1880—10-barrel, long	do	14	Nos. 245–258.
.45	1881—10-barrel, long	Open steel side frame, Bruce feed case	25	Nos. 295–319.
.45	1882—10-barrel, long	do	2	Nos. 321 and 323.
.45	1883—10-barrel, long	Bronze full length case, Accles feed	40	Nos. 342–381.
.45	1885—10-barrel, long	do	20	Nos. 405–425.
.45	1886—10-barrel, long	do	20	Nos. 431–450.
.45	1887—10-barrel, long	do	20	Nos. 457–476.
.45	1889—10-barrel, long	Open steel side frame, Bruce feed, Murphy stop	18	Nos. 492–509.
.45	1891—10-barrel, long	do	18	Nos. 510–527.
.45	1892—10-barrel, long	do	18	Nos. 530–547.
.30	1893—10-barrel, long	Open steel side frame, Murphy stop, positive side feed	18	Nos. 1001 to 1018.

MOUNTINGS FOR GATLING GUNS.

Gatling guns may be mounted either upon tripods or upon light two-wheeled carriages.

The tripod consists of a cast-iron turntable bedplate in which are sockets for three wooden legs, shod with cast-iron footplates having sharp steel footplate calks. The legs are secured in the bedplate by socket bolts. Upon the bedplate rests a cast-iron turntable which has projecting from its underside a pintle, constituting the axis of revolution. Resting upon this turntable, upon a vertical pivot bolt, is a cast-iron V-shaped swivel with trunnion beds for the trunnions of the gun, over which are fitted cap-squares secured in place by bronze key and chin bolts. A steel cam lever acts as a binder to hold the turntable in position.

On a bracket from the turntable is mounted the elevating device, which consists of a sleeve capable of vertical motion, controlled by a clamp. The elevating screw, surmounted by a handwheel, works in this sleeve. The gun rests on the top of this screw.

The component parts of the tripod are:

1. Trunnion swivel, cast iron.
2. Trunnion-swivel stop, wrought iron.
3. Chin bolts, bronze (2).
4. Key bolts, bronze (2).
5. Cap-squares, bronze (2).
6. Cap-square keys, rings, and chains (2).
7. Cap-square eye pins (4), rings (4), chains (2).
8. Pivot bolt, nut, and washer.
9. Pivot-bolt key.
10. Turntable, cast iron.
11. Turntable bedplate, cast iron.
12. Turntable binder, steel.
13. Turntable-binder washer, steel.
14. Turntable-binder handle, steel.
15. Turntable-binder handle stop screw.
16. Turntable-binder pivot screw.
17. Elevating screw, steel.
18. Elevating-screw handwheel, bronze.
19. Elevating-screw box, steel.
20. Elevating-screw box lifter, bronze.

Digitized by Google

21. Elevating-screw box-lifter screws (2).
22. Elevating-screw box binder, steel.
23. Elevating-screw box-binder handle, cast iron.
24. Elevating-screw box-binder stop screw.
25. Legs, wood (3).
26. Leg sockets, cast iron (3).
27. Leg-socket bolts and nuts (3).
28. Leg-socket screws, 1.5-inch, No. 20, wood (12).
29. Footplates, cast iron (3).
30. Footplate screws, 1.5-inch, No. 20 (3).
31. Footplate calks, steel (3).

The carriage furnished by the Colt's Arms Manufacturing Company for the earlier models of gun is very similar to the wooden carriage for 3-inch muzzle-loading field guns; it consists of an iron axle mounted in a wooden body, upon which is supported the trail stock, of wood, with two wooden cheeks.

The two wheels are of wood with iron tires. Resting upon this trail is a bedplate, supporting a V-shaped trunnion swivel, in which rest the trunnions of the gun.

In connection with this carriage is a limber carrying one large ammunition chest, the interior of which is subdivided into compartments for fifty tin feed cases. The lid of the chest turns about horizontal hinges at the lower edge of the chest, and when open is supported by leather straps. The wheels of the limber and carriage are of the Sarven pattern, 44½ inches high, with 44-inch track. The weight of the carriage and limber complete without ammunition is 816 pounds; the weight of the ammunition 208 pounds; total, 1,024 pounds. It is drawn by two horses.

The Watervliet Arsenal carriage, United States pattern, adapted to guns using the Bruce feed case, is also of wood. The two wheels are of the same pattern as those of the 3-inch muzzle-loading rifle carriage. The axle is of steel with wooden axle body. The stock consists of two thin plates of mild steel. It is stiffened with five transoms. The lower ends are united by the lunette. At the center of the axle is a bronze axle block, which supports a bronze V-shaped swivel, in which rest the trunnions of the gun. The pintle projecting below the base of the swivel passes through the axle block, and is secured below by a nut. The cheeks are of steel reenforced by two steel plates bolted to the axle block.

The trail handspike is of 1-inch pipe and is permanently attached to the lunette plate. When not in use it rests in a clamp attached to the top of the stock.

The elevating lever is pivoted on the swivel and when not in use rides between the flasks of the trail. There are two axle braces of steel connecting the axle with the trail. Each wheel is provided with a Buffington traveling brake, arranged for use as a mud scraper when desired. There are also provided chains to retain the brakes on the wheels when serving as mud scrapers and spring catches to secure them when not in use.

On either side of the swivel is an ammunition box, the right-hand one being so arranged that it may be revolved down to the front. Each box contains 48 packages of 20 cartridges each. The left-hand box is immovably fixed to the axle with lid across the whole top, opening from the gun. The right-hand box has its lid on the end toward the trail, hinged at the top.

The limber has wheels of the same size and pattern as the carriage, and a similar axle. The ammunition chest is of wood reenforced with angle irons, capable of carrying 13,440 rounds Its interior is divided into six compartments. A bar, hinged at the bottom of each compartment, secured at the top by a spring clasp, retains the packages in place when the lid is open. Metal plate followers filling in grooves are used to retain the packages in place when the compartment is partly emptied. The lid is hinged at the lower rear edge of the chest, and when open is held in horizontal position by two chains terminating in snap hooks which, when loosened, permit the lid to fall into a vertical position, to render the packages more easily accessible.

There are two front footboards resting flat on the hounds.

Digitized by Google

The splinter bar is of the same length as the footboards. The fork extends beyond the hounds, and has attached to it an evener with singletrees at each end. The pole is provided with a prop which, when not in use, is held up by a spring clasp on the left hound.

On the footboards are carried two watering buckets in iron rings. Beneath the footboards are a spade and a shovel, secured by sockets and straps with turn-buckles.

On the front of the limber chest are carried two felling axes and one mattock, held by sockets and spring clasps.

CARRIAGE FOR THE MODEL OF 1883 GATLING GUN.

The Watervliet Arsenal carriage and limber for the model of 1883 gun, with Accles feed cases, differ from the former in many details. All the parts of the carriage are of steel, and where possible are riveted together instead of being bolted. The ammunition chests are of sheet steel.

In the axle chest the back, bottom, and front are of one sheet bent to form, the ends being riveted thereto. Angle pieces riveted to the ends extend under the bottom. The lid opens upward. Each chest contains two Accles feed cases protected by wooden fillings. In the right chest there is carried one crank handle for the gun, one drift, one lock screw-driver, one hand screw-driver, one T screw-driver, one pin wrench, one sight (right). In the left chest there is carried one cam extractor, one riveting hammer, one oil can, one screw wrench, one sight (left). On the stock, secured by stops and clasps, are carried one oscillating lever and one wiping rod.

The frame of the limber body is put together and secured to the axle by rivets. The only bolts are those that attach the pintle hook to the fork.

Limbers are of two patterns—some have the singletrees attached to a doubletree; in others they are attached directly by draft hooks to a rigid evener bar in front of the footboards.

The ammunition chest is of steel, its parts being riveted together and reenforced by interior and exterior angle irons; it is divided into four compartments. Four Accles feed cases, holding 104 cartridges each, are carried in the rear central compartment. The two end compartments are arranged to carry 132 packages of 20 cartridges each. In front of the central compartment for the Accles feed cases is a front center compartment holding 38 packages of 20 cartridges each; making in all carried upon the limber 6,444 rounds.

If the four Accles cases be omitted, 165 packages of 20 cartridges each may be transported in the rear central compartment, making a total of 9,744 rounds carried on the limber.

The weights of the carriage are as follows:

	Pounds.
Gun carriage, with chests and tools, without feed cylinders	594
Limber and chest	754
Ammunition chest	230
Each wheel	106
Gun	245
Each feed cylinder, without ammunition	16

The component parts of the gun carriage and limber are as follows:

CARRIAGE.

1 axle, steel, 2.5 by 2.25 inches.
2 trail plates, mild steel, 0.2 inches thick.
2 angle irons, iron, 1.25 by 1.25 inches.
2 trail cheeks, reenforces, mild steel, 0.2 inch thick.
1 axle block, bronze.
1 axle strap, iron, forged.
1 lunette, iron, forged.
1 lunette plate, with lug, iron, forged.
5 transoms, mild steel, 0.2 inch thick.
2 braces, iron.
1 trail seat, steel, homogeneous, 0.1 inch thick.
1 trail handspike, 1-inch gas pipe.

Digitized by Google

CARRIAGE—continued.

2 trail handles, iron.
2 axle chests, homogeneous steel.
2 bottom plates, iron, 0.125 inch thick.
1 swivel mounting, composed of—
  1 gun support, bronze.
  2 cap-squares, bronze.
  2 cap-square keys, bronze.
  1 traverse binder, iron.
  1 elevating arc, low steel.
  1 arc binder, low steel, bronze handle.
Swivel mounting—continued.
  2 tool blocks, wood.
  2 sets chest linings, wood.
  2 padlocks and chains, brass.
  Latches, steel.
  Stops, steel.
  Bolts, low steel.
  Rivets, iron.
  2 wheels, Archibald.

LIMBER—BODY.

1 axle, steel, 2.5 by 2.25 inches.
2 hounds, iron, angle, 3 by 2 inches.
1 fork, iron, of 2 angle bars, 3 by 2 inches.
1 splinter bar, iron, angle, 3 by 2 inches.
2 foot plates, steel, Bessemer, 0.165 inch thick.
1 pintle hook, iron, forged.
1 pintle-hook key, iron.
1 pole prop, 1-inch gas pipe.
3 axle straps, flange iron, 0.375 inch thick.
1 fork strap, flange iron, 0.375 inch thick, with eye, iron.
1 front fork strap, iron, 0.25 inch thick.
1 evener plate and pin, iron, forged, 0.375 inch thick.
1 evener-pin brace, iron.
2 corner irons, iron, 0.375 inch thick.
1 pole, wood.
1 pole yoke, iron.
1 pole key, iron.
1 evener, wood, 2 end bands, iron.
2 singletrees, wood, 2 middle bands and 4 end bands and hooks, iron.
4 footplate brackets, iron.
Clasps, steel.
Bolts, low steel.
Rivets, iron.
2 wheels, Archibald.

LIMBER—AMMUNITION CHEST.

1 bottom, steel, Bessemer, 0.1 inch thick.
2 sides, steel, Bessemer, 0.1 inch thick.
2 ends, steel, Bessemer, 0.1 inch thick.
1 top, steel, homogeneous, 0.1 inch thick.
2 partitions, steel, Bessemer, 0.1 inch thick.
1 subpartition, steel, Bessemer, 0.083 inch thick.
4 bottom angle irons, outside, steel, Bessemer, 0.1 inch thick.
4 corner angle irons, outside, steel, Bessemer, 0.1 inch thick.
1 shield, steel, Bessemer, 0.1 inch thick.
4 bottom angle irons, inside, steel, Bessemer, 0.083 inch thick.
4 corner angle irons, inside, steel, Bessemer, 0.083 inch thick.
1 band, iron.
3 hinges, iron.
2 handles, iron.
2 clasps, iron.
2 turn-buckles, low steel.
Linings to protect feed cylinders, wood.
4 bolts, low steel, to attach chest to limber body.
Rivets, iron.
1 padlock, brass.

THE CAVALRY CART.

The most compact form of carriage is that adapted to the short-barreled guns, known as the cavalry cart or carriage. It was designed for guns using the tin feed case. In it the turntable base is mounted directly upon the floor boards of the two-wheeled carriage, the axletree of which is iron with a wooden axle body.

This carriage is drawn by a pair of shafts for the off horse and a singletree, which may be readily removed, for the near or driver's horse. The shafts serve as the stock for the carriage.

There are three ammunition chests, one on each side of the gun, resting on the same floor boards, and one under the axle, supported by iron understraps. The ammunition chests are of wood. Each of the upper ones carries 960 cartridges in feed cases, and the lower one

Digitized by Google

2,000 cartridges in the original packing boxes. In the lower chest there is also a small box for the implements issued with the gun.

The height of the wheel is 4 feet 7 inches; track, 5 feet. Weight of carriage, without ammunition, 770 pounds.

CARRIAGE FOR MACHINE GUNS—MODEL 1890.

The model of 1890 carriage for machine guns is of metal, excepting the wheels, which are of special Archibald pattern, differing from those used in field carriages.

The spindles are riveted to the ends of the axle body, which is a box beam, whose sides are composed of steel plates .15 of an inch in thickness, united by angle irons at their edges, to which they are riveted. This body is strengthened by a T iron riveted on its underside.

The trail is also a box beam composed of similar plates, stiffened by a transom and the lunette plate.

Provision is made for carrying cartridges in two compartments in the axle body and two in the trail, access to which is had through doors. The doors of the axle compartments are secured by turn-buckles, and that of the upper compartment in the trail by a key on the end of a key chain attached to a key eye pin on the door. The door covering the lower trail compartment constitutes, when raised and supported by a seat prop, a seat for the gunner. The lower trail compartment may be used as a tool box.

There is riveted to the axle body, and having its seat within the same, a pintle socket for mounting the saddle, in which the gun rests.

The trail handspike is a straight tube terminating in an attachment, through the eye end of which a bolt passes, which is journaled in the ears of an ear plate riveted to the lower end of the trail.

The front of the axle body is circular in horizontal section, and may have attached to it a shield apron for the protection of the gunners. The barrels project through the shield, which is so arranged that the opening is kept at the minimum by two auxiliary disks working about centers so as to permit motions of traversing or elevating. The apron is hinged so that it may be folded up and keyed to the underside of the trail when not in action.

The carriage is used with a limber, which is also made of steel with the exception of the wheels, pole, and ammunition chest.

NOMENCLATURE.

CARRIAGE.

Wheels (Archibald):
- Tire.
- Fellies, bolts, and nuts.
- Spokes.
- Nave boxes.
- Nave-box flanges.
- Nave-box bolts and nuts.
- Dowels.

Body (which is also the axle body, and forms the cartridge compartment):
- Upper plate.
- Lower plate.
- Front plate.
- Rear plates—Inside, right and left.
  Outside, right and left.
- Cartridge-compartment doors, hinges, and pins.

Body (which is also the axle body, etc.)—Continued.
- Cartridge-compartment-door turn-buckles and studs.
- Pintle socket (for mount).
- Pintle-socket stop pins.
- Axle spindles.
- Axle-spindle bolts and nuts.
- Axle T iron.
- Axle quoins.
- Angle irons.
- Rivets.
- Linch washers.
- Linchpins.
- Linchpin clasps and rivets.

Trail:
- Top plate.
- Bottom plate.

Digitized by Google

Fig. 9 – Gatling Gun – 10 Barrel.
Metallic Carriage

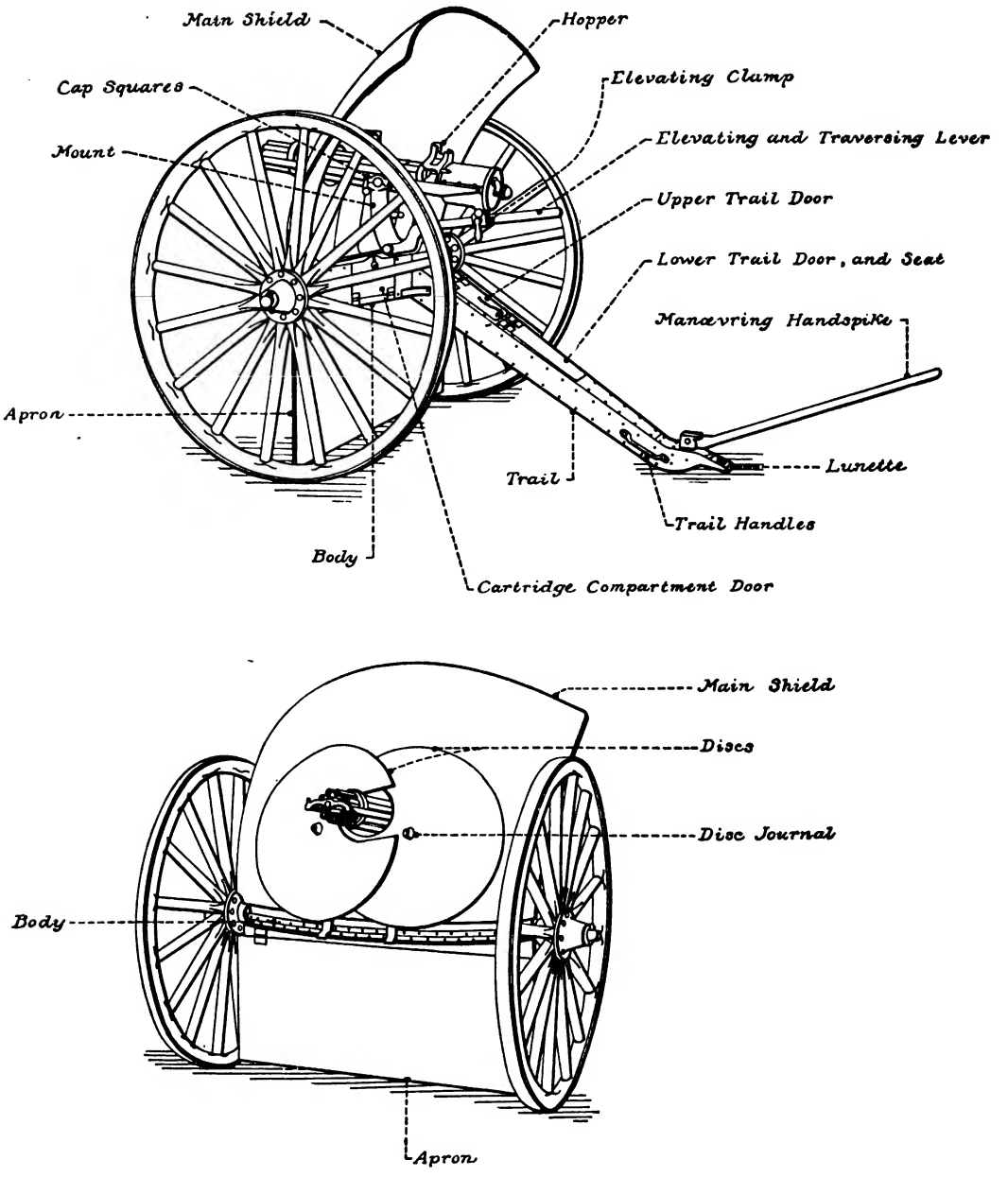

Digitized by Google

Digitized by Google

CARRIAGE—continued.

Trail—Continued.
- Side plates.
- Transom.
- Upper door.
- Upper-door hinges and pins.
- Upper-door key.
- Upper-door key eyebolt.
- Upper-door key chain.
- Upper-door key-chain rings.
- Upper-door key-chain eye pin.
- Lower door and seat.
- Lower-door and seat-plate hinges and pins.
- Seat prop.
- Seat-prop hinge, strap, and pin.
- Seat-prop rest.
- Lunette.
- Lunette plate and handspike attachment.

Trail—Continued.
- Handspike.
- Handspike bolt and nut.
- Handles.
- Angle irons.
- Rivets.

Shield:
- Shield.
- Shield attachments, bolts, and nuts.
- Aperture ways.
- Disks.
- Disk carrier.
- Disk journals, washers, and nuts.

Apron:
- Apron.
- Apron hinges and pins.
- Turn-buckle and stud (on bottom plate of trail).

MOUNT FOR GATLING GUN, MODEL 1890.

Mount:
- Body.
- Cap-squares.
- Hinge pins.
- Locking keys.
- Locking-key securing screws.
- Clamp screw.
- Clamp-screw handle.

Mount—Continued.
- Clamp-screw handle pin.
- Clamp-screw stop pin.
- Clamp-screw washer nut.
- Clamp-screw washer-nut securing screw pin.
- Clamp-screw stop washer.
- Clamp-screw stop-washer pin.

LIMBER.

Wheels (Archibald):
- Tire, with bolts, nuts, and washers.
- Fellies, with rivets and burrs.
- Spokes.
- Nave boxes.
- Nave-box flanges.
- Nave-box bolts and nuts.
- Dowels.

Body (metal) and connected parts:
- Axle.
- Linchpins, with clamps.
- Linch washers.
- Hounds.
- Fork.
- Crossbar.
- Understraps, attaching fork and hounds to axle and crossbar to fork.
- Corner brackets, connecting crossbar to hounds.
- Pintle, with bolts and nuts connecting pintle to rear end of fork.
- Pintle key and chain.
- Pole prop.
- Pole-prop eye.
- Pole-prop spring.
- Footboards, metal.
- Rack in front of chest, with three standards riveted to body, and four bolts with nuts attaching rack to front of chest.

Body (metal) and connected parts—Continued.
- Pole, with shoe and neck-yoke stop.
- Pole key, with safety spring.
- Doubletree bolt, with stay and stay bolts.
- Doubletree stay chains.
- Doubletree, wood, ironed.
- Singletrees, wood, ironed.
- Neck yoke, wood, ironed.
- Pole pad.
- Neck-yoke pads.

Ammunition chest (wood, ironed):
- Chest.
- Lid.
- Hinges.
- Hasp.
- Turn-buckle and stud.
- Corner irons.
- End irons.
- Shield.
- Canvas cover on lid.
- Paulin straps on lid.
- Two wooden partitions, dividing interior into three compartments.
- Copper strips, covering hinge and hasp straps.
- Bolts, nuts, and plates to attach chest to body.

Digitized by Google

THE GARDNER GUN.

The improved Gardner gun consists of two simple breech-loading rifle barrels, placed parallel to each other, about 1.4 inches apart, in a case or compartment. These two barrels are loaded, fired, and relieved of shells by one revolution of the hand crank.

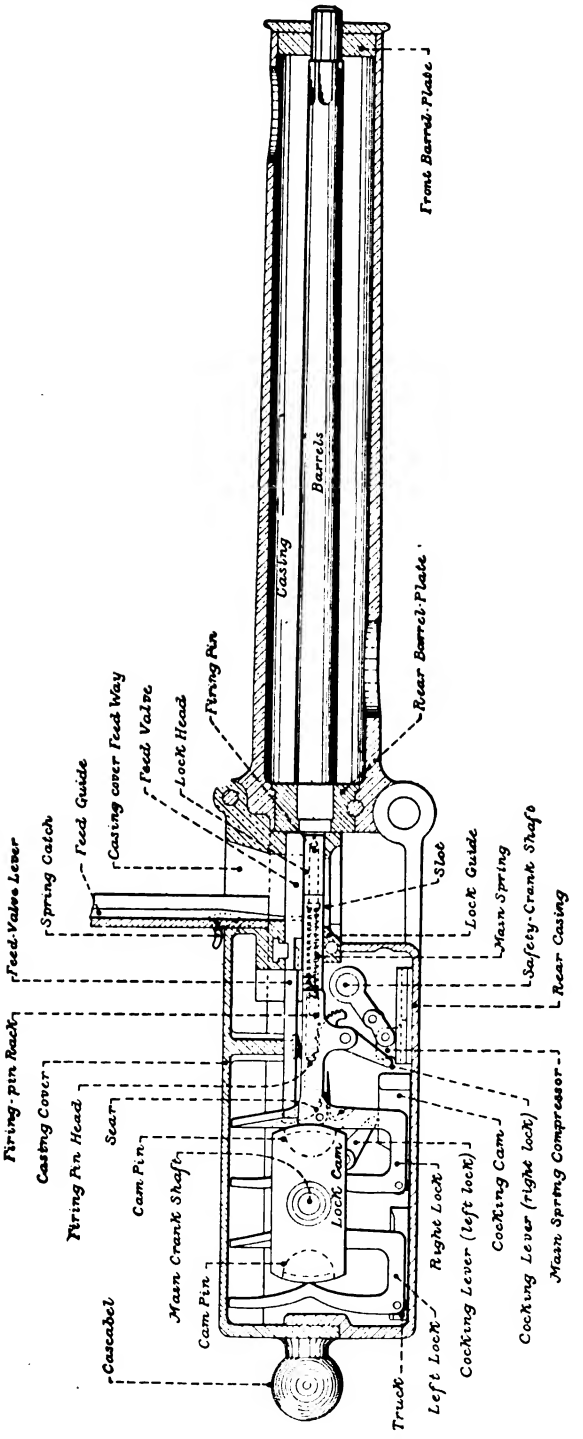

Fig. 10. Gardner Gun and Breech Mechanism.

The barrels are screwed into a rear barrel plate, which is pinned fast to the rear casing, and the muzzles pass through another similar plate, called the front barrel plate, which is fitted into the front of the casing and made fast by a taper pin. The casing extends from the rear barrel plate far enough to the rear to contain all the lock parts, together with the lock cam and safety stop. A swinging casing cover, hinged at the forward end, is firmly locked in position by a cascabel having a screw thread cut on its stem. When the cover is raised, which can be quickly done after turning back the cascabel, all of the working parts of the gun are fully exposed.

The main crank is locked fast to the lock cam, which is supported by journal boxes. The boxes are locked into the rear casing and serve as a protection to the casing cover from side thrusts. The body of the lock cam has cam pins for operating the locks diametrically opposite each other, the firing being alternate, and eccentric enough to give the required motion to the locks as they are moved forward and back, driving in cartridges and drawing out shells. The outer portions of the cam pins are flattened to the circle of the periphery of the lock cam for the purpose of holding the lock stationary while firing, about $\frac{1}{8}$ part of the revolution of the main crank allowing ample time for hang fires. The lock in form resembles the letter **U**, having an extension from its side which contains the firing pin, spiral main spring, cocking levers, firing pin rack, extractor, and lock head. The **U** part of the lock, that works under and around the cam pin, is curved at the inner front to correspond to the outer circle of the cam, the office of this curved front being to hold the lock in position for firing. The circular firing pin is flattened a portion of its length near the

Digitized by Google

front end, to allow it to pass under the extractor, by which it is held in position. It extends from the head of the lock through the main spring and firing-pin rack, terminating in a flange or head for locking into a sear. The sear, having the form of a bell crank, pivoted at the center to the lock, holds the firing pin securely and prevents it from touching the cartridge until it is released from its hold by the action of the cam when the lock is in its extreme forward position.

The cocking lever, hinged in a recess in the lock, and engaging, by means of gear teeth, with the firing-pin rack, has its arm forced against the main-spring compressor, thus compressing, through the medium of the firing-pin rack, the mainspring, and holding it tense until released by the action of the sear.

The cocking cam is located between the locks at the front of the lock cam. It is so arranged that it engages the arm of the cocking lever, in the backward movement of the locks, thus positively withdrawing the firing pin, and at the same time forcing the head of the same over the catch of the sear.

The lock heads serve as breech plugs, and receive the recoil when the cartridges are fired. Each lock carries a hook extractor, which rides over and catches the flange of the cartridge when the lock is forced forward, and when the lock retreats it withdraws the empty shell till it strikes the ejector, by which it is thrown out. The shell starters have a positive movement in connection with the lock head. Should the cartridge be driven by the extractor into the barrel, to its head, as is the case when the gun is worked rapidly, before the lock is in firing position it is forced from the chamber by the shell starter as the lock advances and is held long enough for the extractor to engage with the head, when the lock, extractor, and cartridge are driven home together.

The ejectors, hinged to the casing, are driven by projections on the sides of the locks, which give them positive movements to eject the empty shell. They also serve as stops to prevent the cartridges from falling through the lock guide as they are forced down through the feed valve.

The lock guide extending across the rear casing, to which it is fastened by a pin, has two parallel semicircular grooves, which are enlarged extensions of the chambers in the barrels. From the back part of the grooves, slots large enough to pass freely the cartridges (being wider at the rear, behind the ejector, than at the front) are cut downward through the lock guide. When the extractor has drawn the shell back nearly to the extent of the throw of the cam, the ejector forces the shell through the slot and is then in position to receive another cartridge from the feed valve. The feed valve, attached to the casing cover, has a reciprocating motion across the lock guide. It has two angular openings of the size and shape of the outline of the cartridges, with centers equidistant with the centers of the barrels. After a cartridge has dropped one-half its diameter into the valve, it is forced by the action of the latter into its proper position and held positively against the angle of the lock guide. When the valve is again moved back, the cartridge is forced downward into the lock guide and the column of cartridges is cut off in the casing-cover feed way, which is an extension of the feed guide that is located above and in line with the lock guide.

The feed valve is driven by the feed-valve lever; this also is attached to the casing cover, and is operated by the locks, using about one-fifth the stroke of the crank in its forward motion, thereby giving the valve ample time to hold both cartridge and shell down in position as they move in and out from the barrel. The feed guide is a simple plate having two parallel T grooves extending from end to end. The upper end has a projection, with rib extending upward, for the purpose of guiding the cartridges into its mouth. The lower end is provided with a cartridge stop, which lifts all cartridges contained in the guide when it is taken out from the casing cover by which it is supported. The guide is held fast in

Digitized by Google

firing position by a spring catch. It can be quickly released by drawing back the catch by pressure on its exposed arm. In placing the guide in position, the spring catch is self-acting. These operations require but one hand, leaving the other free to place the safety crank in position. The mainspring compressor is an oblong block having an angular face against which the arm of the cocking lever in the block may engage when the locks are moved forward by the cam. It is held in position by two links, which are moved by a lever that is splined fast to a shaft passing through the rear casing, to the outer end of which is pinned the safety crank. This crank has a stop spindle in its handle, behind the shoulder of which is a spiral spring that forces the spindle out from the arm into the stop holes, marked "Safe" and "Fire!" in the rear casing. When the safety stop is in the hole marked "Fire!" the arm is in line with the barrels, the mainspring compressor is thrown within the reach of the cocking lever, by which the mainsprings are compressed, and the gun is in firing position. When the spindle is in the hole marked "Safe," the mainspring compressor is carried forward out of the way of the cocking lever, and in no case can the springs be compressed while the stop is in the safety hole.

The only Gardner guns at present used in the United States service are of .45-inch caliber.

TO OPERATE THE GARDNER GUN.

1. Insert the feed guide in the opening in the casing cover, pressing it down until the catch springs into place.

2. Turn the safty crank upward and to the rear until the crank stop drops into the recess marked "Fire."

3. Remove the cover of one of the feed cases, and with the left hand insert the heads of the cartridges into the grooves of the feed guide; bear downward on the feed case, steadying the guide with the right hand, and when all the cartridges are in the guide, pull the case away from the cartridges.

Repeat the operation until the feed guide is full before commencing firing, and see that it be kept full during firing, which may then be made continuous. Turn the crank. If the crank be turned before the feeding of the cartridges is commenced, the first few will fall irregularly, and might check the working of the gun.

4. *To point the gun:* Unclamp the swivel plate and mount body, and by means of the cross-handle clamp screw, that serves the double purpose of pointing lever and clamp screw, turn the gun in the direction required. Reclamp the swivel plate and mount body. For exactness use the elevating-screw attachment.

5. *To oscillate the gun without changing the elevation:* Unclamp the swivel and turn the gun back and forth from right to left by means of the pointing lever, regulating the amplitude of the vibration by the oscillator stop head.

6. When the firing is discontinued, turn the safety crank downward and to the front until the crank stop drops into the safety recess.

This gun may be fired by turning the crank backward.

TO DISMOUNT THE GARDNER GUN.

1. Unscrew the cascabel and raise the rear casing.

2. Remove the barrels. To do this, drive out the front and rear barrel-plate pins, interpose a piece of wood or a cartridge shell between the rear of either barrel and its corresponding lock, taking care that it does not enter the chamber; turn the crank gently, and the lock will force the barrels partly out of the casing, when they may be removed by hand.

Digitized by Google

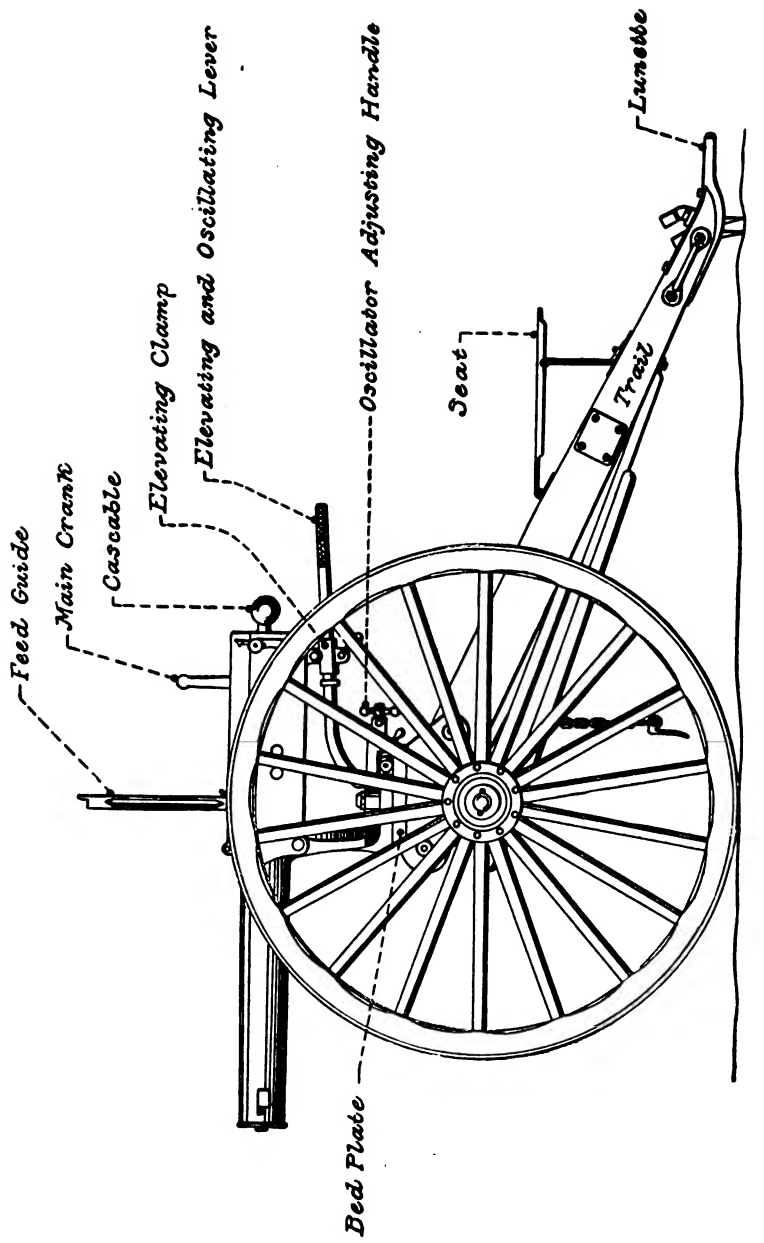

Fig. 11—Gardner Gun.
Field Carriage

Digitized by Google

Digitized by Google

3. Remove the locks. To do this, turn the crank until either lock-cam recoil plate is uppermost. Rotate the corresponding lock about the recoil plate until it is vertical, and draw it out at front. The other lock may be removed in the same manner.

4. Remove the ejectors directly by their pins.

5. Remove the lock cam, raising it vertically by means of its journal boxes. The journal boxes may be removed from the cam by driving out the journal box and main crank pins.

6. Drive out the lock-guide pin and remove the guide. The shell starters may be removed from the lock guide by driving out their pins, and the cartridge guide by turning out its screw.

7. Turn out the cocking-cam screw, which enters the cam through the bottom of the casing, and remove the cam.

8. Turn out feed valve and valve-lever screws, and remove valve, valve slide, lever, and lever slide.

9. Drive out safety-crank pin and remove crank. The safety stop head, stop, and spring may be removed from the crank by driving out the stop-head pin.

10. Drive out the safety-crank shaft and remove the spline.

11. Slide out the mainspring compressor at the rear of the guide.

12. Remove the mount and casing lock pin, and turn the spoke-wheel nut from the elevating screw; drive out the casing pin.

13. Draw back the lock bolt from the socket of the bedplate; unclamp the swivel plate and lift it from the carriage. The gun and mount may be removed directly from the carriage in the manner prescribed for the swivel plate alone.

14. Remove the split pin from the mount base bolt; remove the nut from the same; remove the lock nut on the swivel-plate clamp bolt; remove the clamp-handle nut; draw out the oscillator-nut pin.

15. Remove the oscillator stop nut; remove the swivel plate from the base; turn out the oscillator stop screw.

To assemble, proceed in the inverse order.

TO DISMOUNT THE LOCK OF THE GARDNER GUN.

1. Draw out the extractor pin, and remove the extractor.

2. Unscrew the lock head by means of the lock wrench.

3. Uncock by pressing on the sear and turn the cocking lever to the rear; drive out the cocking-lever pin and remove the lever.

4. Draw out the firing pin, remove the rack, and unscrew the mainspring.

5. Draw out the sear-spring pin and remove the spring.

6. Drive out the sear pin and remove the sear.

7. Drive out the truck pin and remove the truck.

To assemble proceed in the inverse order, taking care to return the firing pin so that its flat will be at the extractor slot, and that the front tooth on the cocking lever enters the front space in rack.

THE CARRIAGE AND MOUNT FOR THE GARDNER GUN.

The Gardner gun can be mounted either upon a carriage for field work or upon a tripod for use in fortifications.

The guns now in service are mounted upon old-model carriages composed of wood and iron, similar to the 3-inch field-gun carriages, so far as the trail, axle, and wheels are concerned. The carriage for machine guns, model 1890 (see fig. 9), is intended to be used with this gun as well as with the Gatling.

Digitized by Google

The distinctive feature of the carriage lies in the bedplate, with its arrangement for oscillation, and in the manner of mounting the gun. For the latter purpose the frame fitted to the bedplate (fig. 12 *A*), has at its forward portion a projecting arm bored at the upper end for attachment by an ordinary pinned hinge to the casing of the gun at a point just below the rear barrel rings. A second attachment is made at the rear of the casing by means of a sliding clamp on the elevating (and oscillating) lever, which, in its turn, is attached to the bedplate.

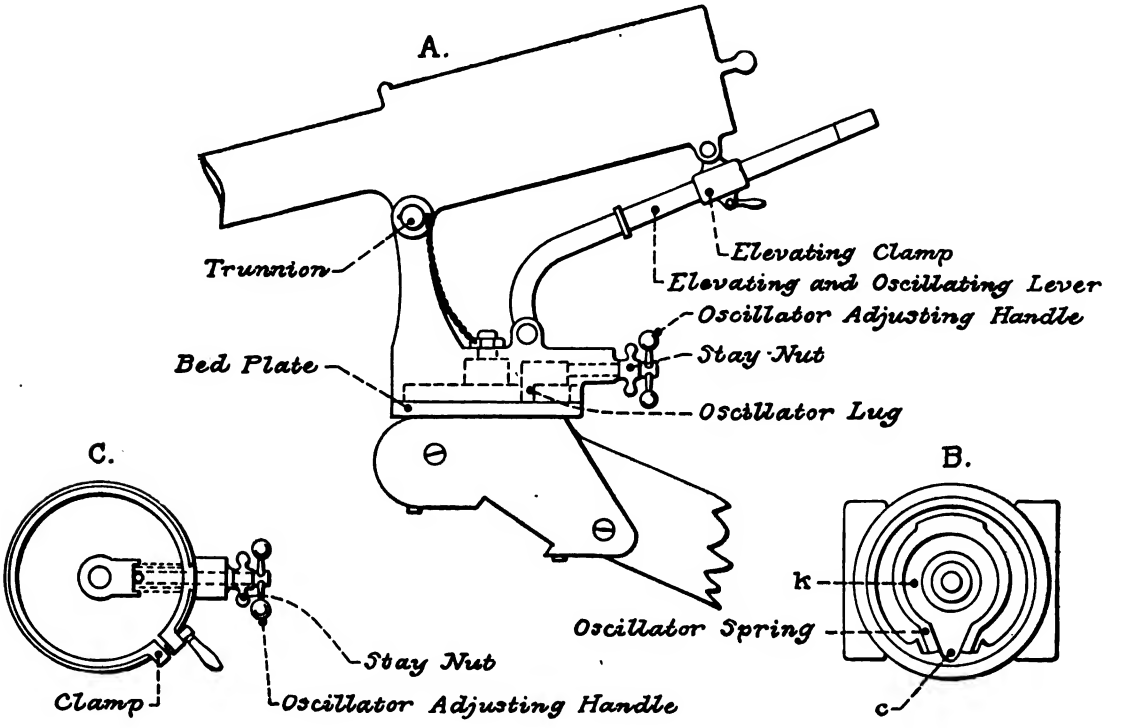

Fig. 12. Oscillator Apparatus for Gardner Gun.

The bedplate holds a spring (fig. 12 *B*) by means of which the oscillation of the gun can be increased or diminished, thus: The lug (fig. 12 *A*), which governs the lateral motion of the gun, has a screw attached to the upper end, which passes through to the rear of the bedplate and has an adjustable handle and stay nut. When the lug is drawn by its screw to the rearmost position it enters the semicircular notch *c* (fig. 12 *B*) and side motion of the gun is checked. As the lug is pushed forward by running in the screw it strikes the sides of the oscillator springs, when the lever is worked from side to side, the amplitude of the oscillation increasing as the lug is pushed forward. After passing the springs it reaches the circular channel (*k*), where it is checked by a stop pin, in which case the gun has full sweep, except as limited by the carriage wheels. When in this position the lateral motion can be checked at any point by using the clamp encircling the rim of the bedplate, shown in fig. 12 *C*.

The latest model of the Gardner carriage is made entirely of steel and bronze. The frame of the carriage, including side walls, bedplate, and axle support, is made in one casting. The lunette body and ring, handspike ring and socket, and ground-recoil stop support are also in one casting. The top and side tail plates are supported at their upper corners by angle

Digitized by Google

irons. These angle irons extend from the frame to the body, and are riveted to them. Lost motion is prevented in the wheels on the arms of the axles by conical sleeves sliding into the boxes of the wheels (their ends being cupped to receive the same) against conical washers supported by the linchpins. The sleeves are forced outward by a toggle joint actuated by a hand lever (underneath the trail) and can be locked either in or out. Compensation is made for wear of surfaces by right and left hand screws locked by jam nuts. The circular bedplate of the carriage, which supports the mount, is provided with a taper socket to receive the spindle of the mount base, which has an annular groove, into which is inserted, by means of a lever, a sliding bolt for holding down the mount base, which passes over and around the bedplate and may be secured to it in any desired position by the grip ring, the latter being fastened in such a manner that it has no movement up or down, while it has ample room to move outward after being released by the grip-ring screw handle. The mount then has full range of the horizon.

From the mount base there projects upward two walls, forming the outer portion of a joint on which rest the walls of the mount body. On the inner side of the body are two circular beveled friction plates, the outer surfaces of which are forced against the inner sides of the mount; these in turn are forced against the walls of the base and supported by a bolt passing through the whole and secured by a washer and nut. The friction plates are held from rotary motion by a stout pin. On the friction plates is a grip ring, the screw of which passes underneath the rear body of the mount far enough to form the pointing lever with its cross handle.

At the front of the mount body, extending upward, is the arm for supporting the gun carriage, which is bored for attachment by an ordinary pin hinge. The mount body extends far enough back to receive the nut for the elevating screw, in the upper part of which is a sliding box to receive the pin which connects it with the rear of the casing.

The means for giving the elevation and making lateral adjustments consists of the screw, washer, pin, spoke wheel, bush-washer nut and tangent pin for same, eccentric, eccentric clamp, and eccentric-clamp screw with cross handle for binding or releasing all the parts at the will of the operator.

THE LIMBER FOR THE GARDNER MACHINE GUN.

The limber is of the ordinary pattern, having a detachable limber chest, which is divided into compartments suited to receive the eight ammunition packing drawers and the slide that carries the spare parts, tools, and appendages. The frame and chest are made of oak. The top of the chest is protected by a sheet-copper covering, and the corners by steel corner pieces. The door of the chest is hinged at the bottom, and can be lowered to a horizontal position, where it is supported by a strong leather strap, forming a platform for the ammunition drawers. The wheels are interchangeable with those of the gun carriage. Each drawer holds 45 packages of 20 rounds each. The total amount of ammunition carried in this limber is 7,200 rounds. The cases are packed on end, and are supported by each other in such manner that they can not be shaken about or upturned; thus all liability of jamming bullets or shells is prevented. The drawers have on their inside walls a series of grooves equal in number to one-third of the paper cases to be packed. A movable partition is arranged to fit in these grooves. After the drawer has received its full number of cases, the movable partition is inserted into the grooves at the end of the drawer, thereby forming an inner wall, supporting and locking the cases firmly in position. In order to break bulk the partition is removed, thus leaving space enough to insert the fingers to break out the first case. When a portion of the cases has been removed from the drawer, the movable partition can be inserted into the grooves nearest the cases, thus securing them as firmly as though the bulk had not been broken. The partition is secured to the drawer by a stout cord, so that there is no danger of its becoming lost.

Digitized by Google

WEIGHT OF THE GUN, CARRIAGE, ETC.

	Pounds.
Weight of improved Gardner machine gun, two-barreled	100 to 125
Weight of each additional barrel, about	10
Weight of gun mount	62
Weight of gun carriage	389
Weight of limber with packing cases for 7,200 cartridges	697
Weight of spare parts, tools, etc	8

NOMENCLATURE OF THE IMPROVED GARDNER MACHINE GUN, CALIBER .45.

1. Casing body.
2. Casing cover.
3. Hinge pin.
4. Hinge-pin washer.
5. Cascabel.
6. Cascabel screw.
7. Rear-sight box.
8. Rear-sight bar:
9. Rear-sight pinion.
10. Rear-sight pinion spring.
11. Rear-sight pinion head.
12. Rear-sight pinion-head pin.
13. Rear-sight extension.
14. Rear-sight extension lock.
15. Rear-sight holding pin.
16. Front sight.
17. Barrels (2).
18. Front barrel plate.
19. Front barrel-plate pin.
20. Rear barrel plate.
21. Rear barrel-plate pin.
22. Lock cam.
23. Lock-cam journal boxes (2).
24. Journal-box pin.
25. Hand crank.
26. Hand-crank pin.
27. Hand-crank handle.
28. Crank-handle spindle.
29. Spindle nut.
30. Lock frames (2).
31. Lock-frame heads (2).
32. Lock-frame trucks (2).
33. Lock-frame truck pins (2).
34. Extractors (2).
35. Extractor pins (2).
36. Sears (2).
37. Sear springs (2).
38. Sear-spring pins (2).
39. Main springs (2).
40. Firing pins (2).
41. Firing-pin racks (2).
42. Cocking levers (2).
43. Cocking-lever pins (2).
44. Cocking-lever stay pins (2).
45. Cocking cam.
46. Cocking-cam screw.
47. Cocking-cam pins (2).
48. Lock guide.
49. Lock-guide pin.
50. Shell starters (2).
51. Shell-starter pins (2).
52. Ejectors (2).
53. Ejector pins (2).
54. Safety crank.
55. Safety-crank stop.
56. Safety-crank stop spring.
57. Safety-crank stop head.
58. Safety-crank stop-head pin.
59. Safety-crank pin.
60. Safety-crank shaft.
61. Safety-crank shaft lever.
62. Safety-crank shaft-lever spline.
63. Main-spring compressor.
64. Lever and compressor links (2).
65. Compressor-link pins (2).
66. Feed valve.
67. Feed-valve cap.
68. Feed-valve cap pin.
69. Feed-valve lever.
70. Feed-valve lever slide.
71. Shell deflector.
72. Shell-deflector pins (2).
73. Casing and mount swivel pin.
74. Casing and mount swivel-pin catch.
75. Elevating screw.
76. Elevating-screw washer.
77. Elevating-screw pin.
78. Elevating-screw slide.
79. Elevating-screw slide-guide pin.
80. Elevating-screw slide pin.
81. Elevating-screw slide-pin catch.
82. Elevating spoke wheel.
83. Elevating spoke-wheel nut.
84. Spoke-wheel nut pin.
85. Spoke-wheel eccentric.
86. Spoke-wheel eccentric bush.
87. Spoke-wheel eccentric-bush washer.
88. Eccentric binding ring.
89. Binding-ring screw.
90. Binding-ring screw handle.
91. Binding-ring screw-stop pin.

IMPLEMENTS, ETC.

92. Wiping rod.
93. Shell driver.
94. T screw-driver.
95. Hammer.
96. Lock wrench.
97. Drifts (6).
98. Headless-shell extractor.
99. Breech-case cover (leather).
100. Packing case.

Digitized by Google

CHAPTER III.

MOUNTAIN ARTILLERY.

Mountain artillery is designed to be capable of being taken wherever troops may be ordered without retarding their movements.

Each component may be transported either by traction, or, after dismounting, on pack mules, through any character of country.

Fixed ammunition with metallic cartridge cases is alone used.

There are two guns adopted as service patterns for the United States Army, viz, the Hotchkiss 2-pounder gun, 1.65 inches caliber, and the Hotchkiss 12-pounder gun, 3 inches caliber.

THE HOTCHKISS 2-POUNDER MOUNTAIN GUN.

The gun is composed of the body of the gun and the breech mechanism.

The body consists of a main tube on which the trunnion hoop is screwed.

The breech mechanism is of the sliding-wedge type.

The bore is rifled with right-hand, uniform-twist rifling with ten grooves.

The breech-mechanism mortise is back of the powder chamber. It is cut horizontally entirely through the breech of the gun and is nearly rectangular in longitudinal section. The front face is at right angles with the axis of the bore, and the rear face slightly inclined thereto. The narrower portion is on the left side so as to give a wedging action in closing the block.

The loading hole, in prolongation of the bore, opens into the breechblock mortise from the face of the breech.

The vent is drilled diagonally from the upper rear edge of the breech, into the breech mortise. Its prolongation extends through the breechblock into the axis of the bore.

The lateral motion of the block is limited by the stop screw, which is an eyebolt inserted in the upper right-hand segment of the breech. It projects through the breech into a groove on the top of the block.

The extractor guide, which is a groove in which the extractor slides, is in the upper part of the mortise. In the bottom of the mortise is a guide for the breechblock consisting of a groove in which a tenon of the block slides.

There is a segment of a screw thread in the right rear surface of the mortise, in which a locking screw is seated.

The breech mechanism consists of the breechblock and its attachments. The breechblock is a prismatic wedge with rounded corners, working horizontally in the breechblock mortise. It is secured in place by a locking screw seated in the right rear end of the block. The shaft of this screw terminates in a lever handle for maneuvering. The motion of the breechblock to the left is limited by a locking plate mounted on the locking-screw shaft.

In the left end of the block is the loading sector, an opening through which the ammunition is passed when the block is in its extreme right-hand position. In the top of the block is a curved extractor slot way in which the extractor stud slides.

Digitized by Google

The extractor consists of a steel bar terminating at its forward end in a hook and having a stud on its underside. This bar slides in its guide in the upper surface of the mortise and its stud works in the curved slot way in the breechblock.

The vent through the breechblock is in prolongation of that through the breech till it reaches the intersection of the bore a little in rear of the front face of the block. From that point it follows the axis of the bore.

The primer, which extends through the vent opening into the breechblock, can not be inserted until the block is closed and locked.

ACTION OF THE BREECH MECHANISM.

The gun having been fired, to open the breech, turn the lever handle to the rear, unlocking the block and starting it in the mortise. Draw the handle quickly to the right until the block is checked by the stop. The first motion starts the shell slowly with powerful leverage. The stud in the extractor works in the slightly inclined guide way until the barrel is unmasked; then the guide way changes in direction, causes the stud to move more rapidly to the rear, and throws the shell case clear of the gun.

To load: Enter the cartridge through the loading hole; push it home till the rim of the cartridge-case head strikes the extractor hook; push the lever handle sharply to the left and lock by turning the handle to the front. Insert a primer in the vent.

THE CARRIAGE.

The carriage is of steel. The flasks are stiffened with angle irons and braced by three transoms and the lunette.

All those parts subject to wear, viz, the lunette, trunnion beds, and bearings for the elevating screw, are of steel castings. The axle is a solid steel forging.

With the view of rendering the carriage light, and of carrying it upon pack mules, its track is made very narrow. The wheels are of wood, with iron tires and bronze naves. There are swivels on the ends of the axles for attaching bricoles or drag ropes.

The elevating apparatus consists of a screw working in a nut swiveled between the carriage flasks. It carries a handwheel near its upper end. Above the handwheel the screw, prolonged, abuts against the underside of the breech of the gun.

ACCESSORIES AND EQUIPMENTS.

The lanyard is a strong cord, having at one end a snap hook and at the other a toggle.

The bristle sponge, for cleansing the bore, is carried on the carriage, secured to the right flask.

The following articles are carried in small haversacks: Cleaning brush, oil can, grease box, screw-driver, saddler's knife, pinchers, punch, boring bit, fuze wrench, spare rope, and cleaning rags. Two covers are provided, one for the breech and the other for the muzzle.

The carriage may be drawn by mules hitched either tandem, with shafts, or side by side, using a jointed pole. In either case the attachment is made directly to the lunette without the interposition of a limber.

It may be hauled by hand, for which purpose two bricoles or drag ropes are furnished. The bricoles are provided with a stout canvas bearing piece at one end and a hook at the other for engaging in the swivels on the ends of the axle.

The gun carriage may also be transported on pack animals.

Primers are carried in two leather boxes on belts.

Digitized by Google

Fig. 13 – Hotchkiss 2 Pdr Mountain Gun
Gun & Breech Mechanism

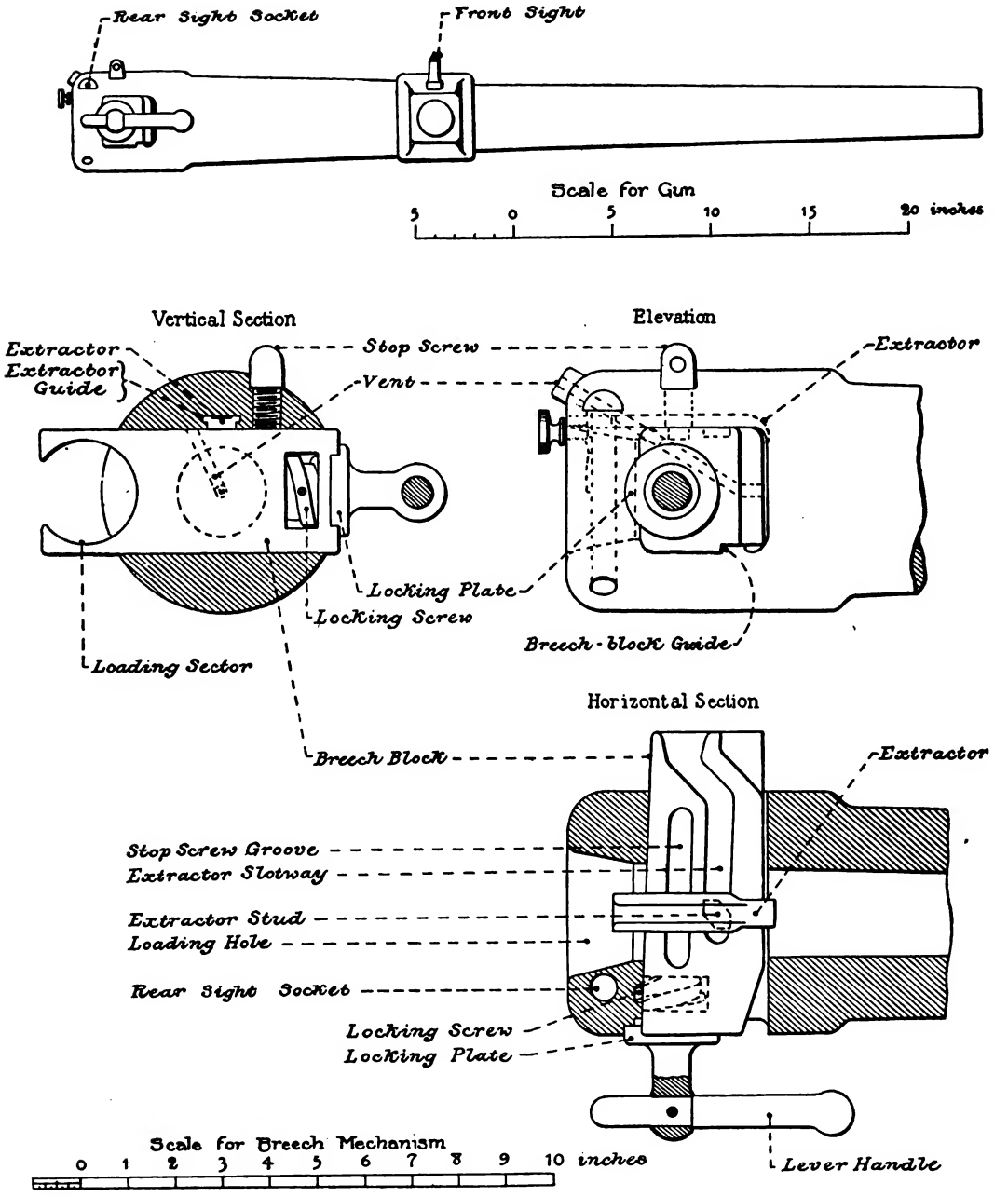

Digitized by Google

Digitized by Google

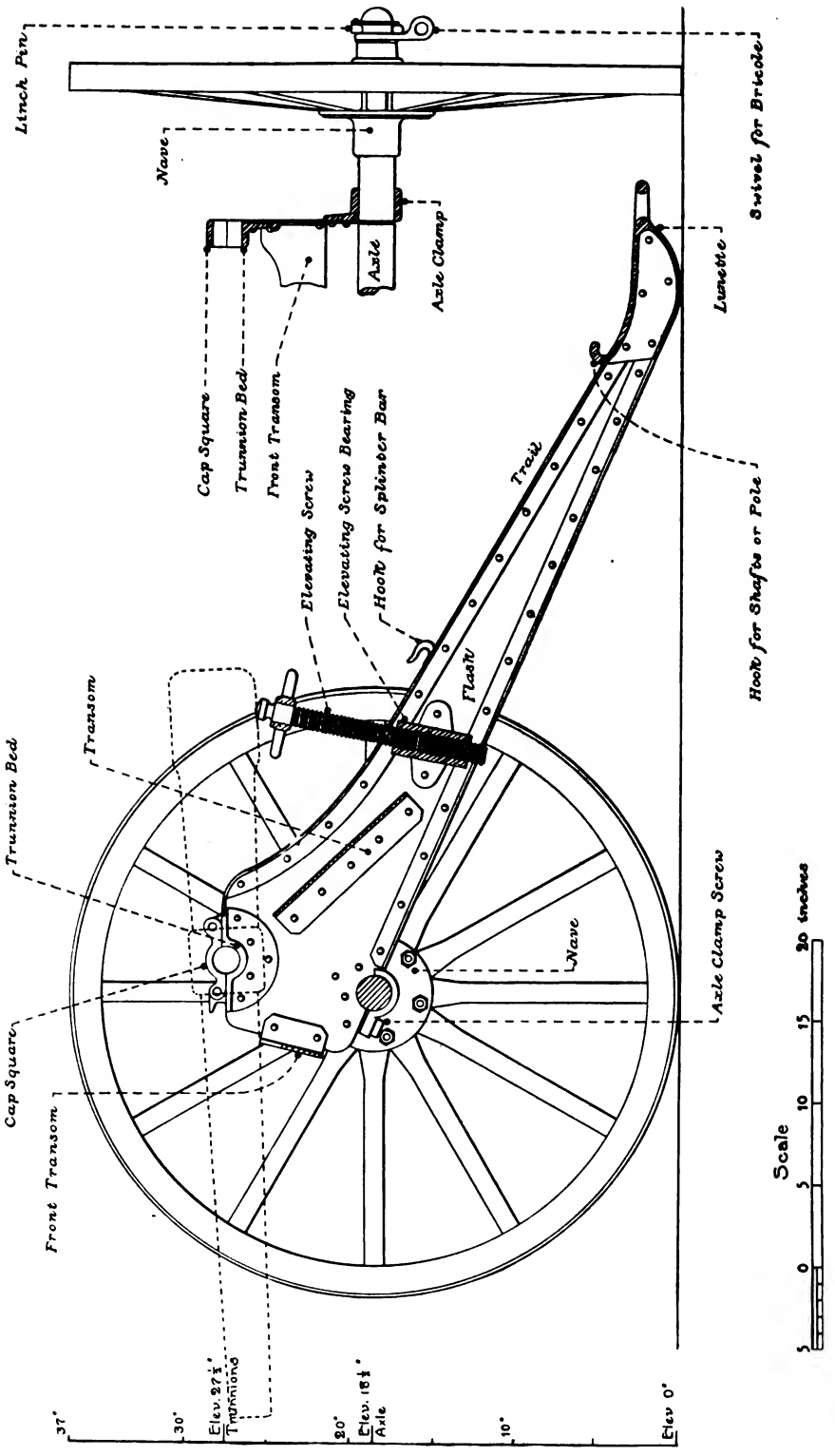

Fig. 14 – Hotchkiss 2 Pdr Mountain Gun Mountain Carriage

Digitized by Google

Digitized by Google

Fig. 15 – Hotchkiss 2 Pdr Mountain Gun
WITH POLE ATTACHED

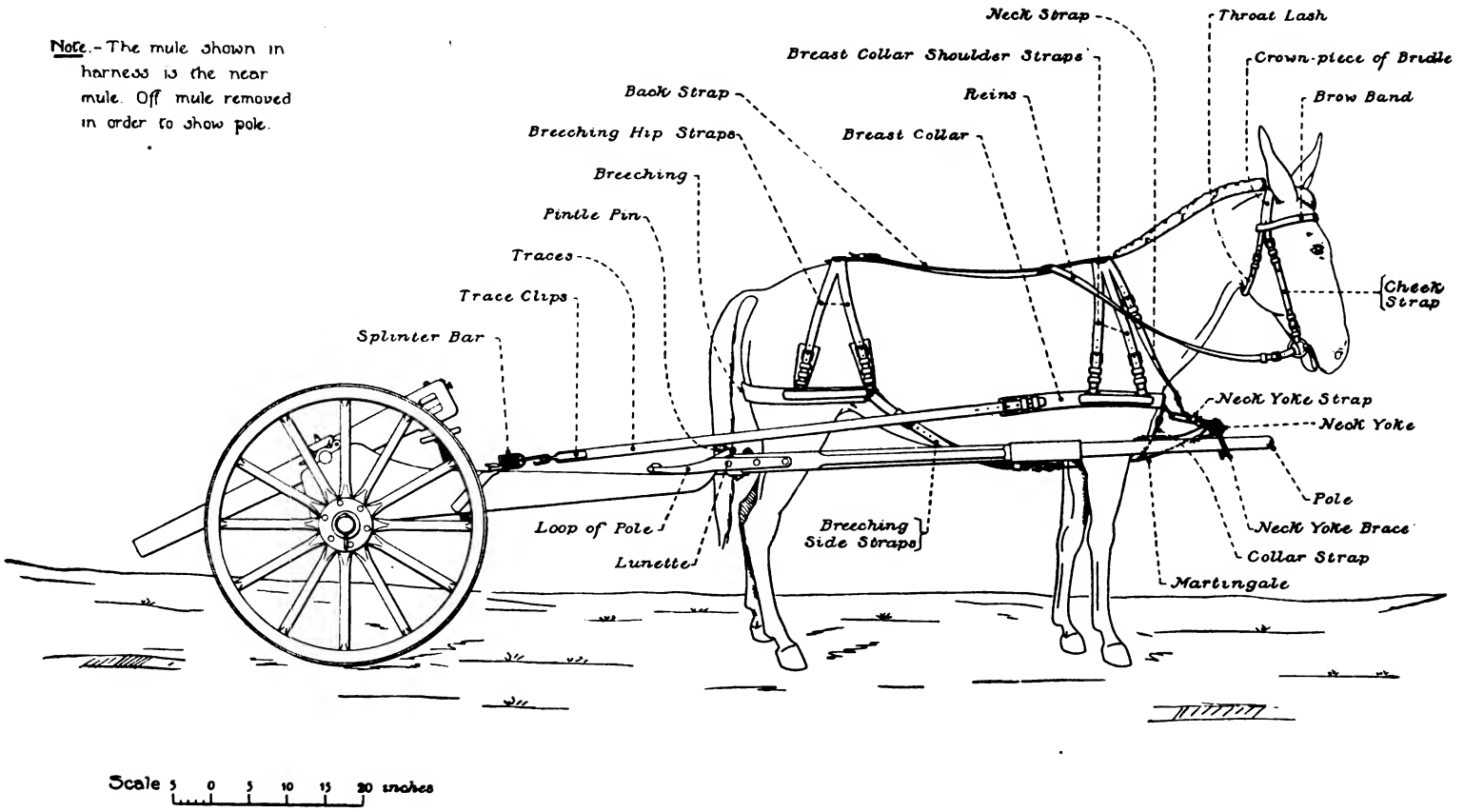

Digitized by Google

Digitized by Google

THE AMMUNITION.

The cartridge consists of three main portions—the cartridge case, the charge, and projectile.

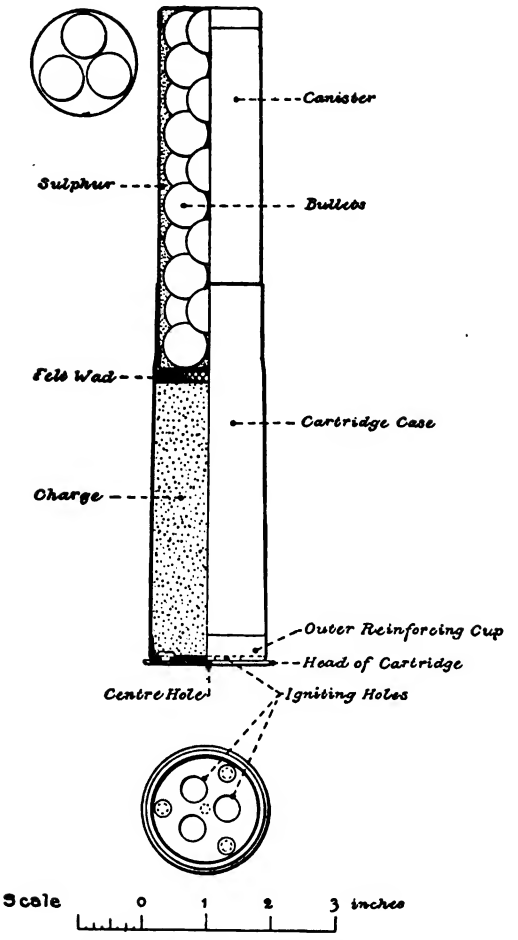

Fig. 16. Cartridge Case and Canister for Hotchkiss 2-Pounder Mountain Gun.

There are two classes of cartridge cases: First, one of the wrapped-metal system, in which the body consists of a single sheet of brass, rolled to shape over a mandrel. The rear end of the roll is turned in and reenforced by an exterior brass cup. The whole is then secured by three rivets to the sheet-iron disk, forming the head.

In the axis of the iron head is a hole for the ignition of the charge. Eccentrically placed about the center of the reenforcing cup are three igniting holes. The gas from the primer enters the central hole in the head, lifts the elastic central portion of the cup, and passes through the above-mentioned holes to the charge. After ignition the pressure of the powder-charge gas causes the reenforcing cup to act as a gas check, closing the hole in the iron head.

In the second form the body of the cartridge case is drawn from a sheet of brass in one piece. It is reenforced at the base by inside and outside cups, also of brass. The head is attached to the body of the case by three brass rivets, which unite the case, cups, and head.

A vent is pierced through the center of the head, and three igniting holes in the inside reenforcing cup give the flame from the primer access to the charge, the pressure from which in turn forces back the center of the cup so as to seal the venthole in the head.

The charge is 5½ ounces of black powder, separated from the base of the projectile by a felt wad.

Two types of projectile are used—canister and shell. The canister consists of a cylindrical tin case, holding 30 hardened-lead 1-ounce bullets, with the interstices filled with a matrix of sulphur. Over the ends of this case are crimped top and bottom pieces.

The shell is of cast iron, cylindro-ogival pattern, with point-percussion fuze, slightly rounded base, and central brass rotating band, secured by cannelures in the body of the shell.

The point-percussion fuze consists of four main parts—the body, head, plunger carrying the primer, and safety plug.

The body is a hollow cylinder of brass carrying a screw thread for securing it in the shell. In the base is a conical hole for the safety plug, and at the front a female thread for the head.

The plunger is a small hollow cylinder of brass, with a lead lining, containing a chamber for an igniting charge of powder, closed at the front end with a fulminate cap. This cap is

Digitized by Google

covered with tin foil as a protection against moisture. Embedded in this plunger is a U-shaped brass wire, with its ends extending to the rear beyond the base of the plunger to the base end of the body.

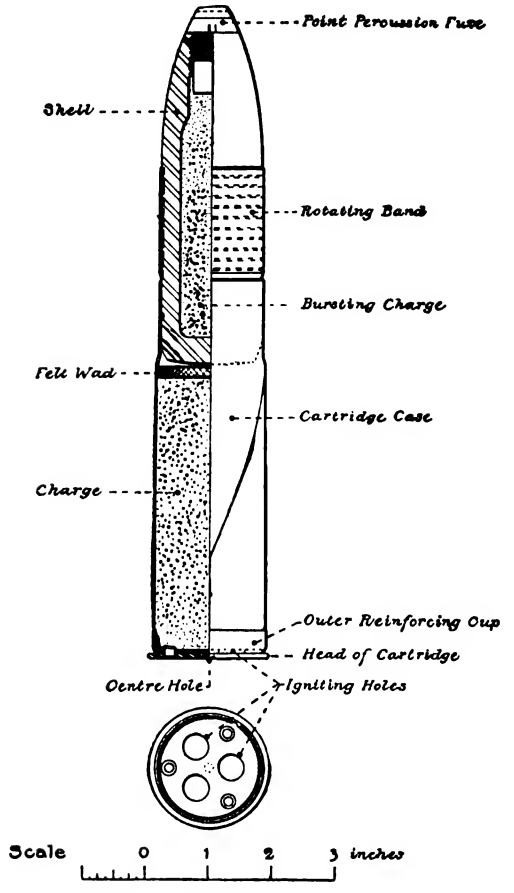

Fig. 17 Shell for Hotchkiss 2 Pounder Mountain Gun.

The safety plug is of lead, conical in shape, forced tightly into the hole in the bottom of the body, where it is held securely from turning or slipping by the ends of the brass wire, which is embedded in the plunger, the rear ends being slightly bent and wedged outward by the plug itself.

The head is of gun metal, its exterior corresponding to the ogival contour of the shell. It is screwed into the front end of the body and carries on its inner side a small steel point, which pierces the fulminate cap on impact.

The fuze acts as follows: When the shell is fired, the plunger does not immediately take up the motion and is forced relatively to the rear, driving the safety plug into the body of the shell.

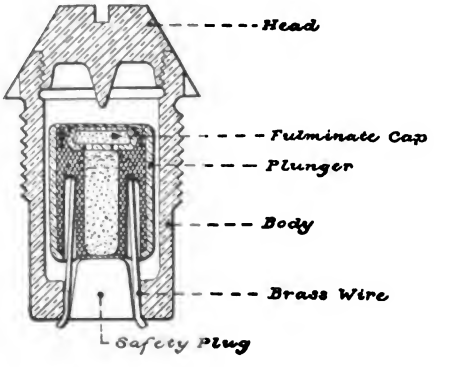

The small wire in the plunger is thus freed. On impact the plunger continues its motion forward, its fulminate cap strikes on the steel point in the head, explodes it, and the igniting charge in turn explodes that in the shell.

In loading the cartridge, the powder is poured into the case, on which is then placed a felt wad, after which the projectile is inserted up to the rotating band and the case is crimped into its cannelure. This insures uniform density of loading.

The prime is that used with ordinary field guns.

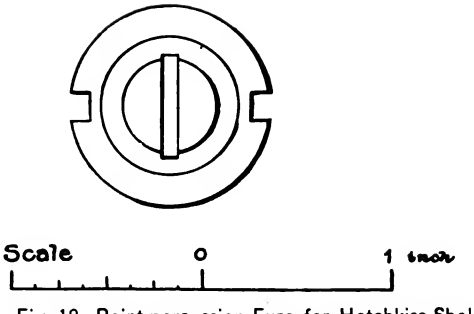

Fig 18. Point-percussion Fuze for Hotchkiss Shell, Caliber 1.65.

TO DISMOUNT BREECH MECHANISM, GUN, AND CARRIAGE.

1. *To dismount the breechblock:* Back out the stop screw about six turns, using the punch as a lever through the eye; draw the block free from the gun; take out the extractor.

Digitized by Google

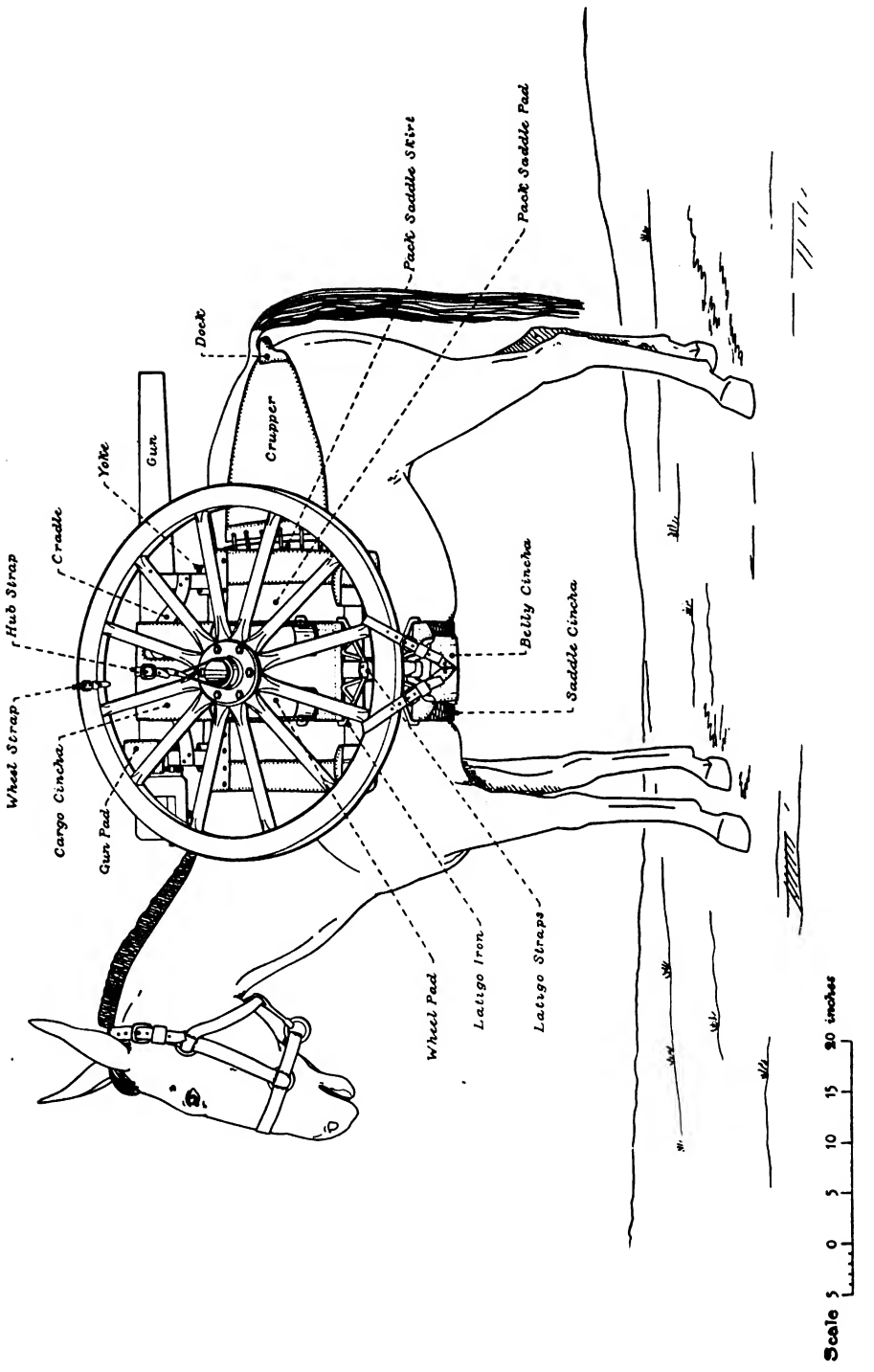

Fig. 19 —Hotchkiss 2 Pdr Mountain Gun Pack. Gun Mule

Digitized by Google

Digitized by Google

2. *To dismount the gun:* Remove the cap-squares and lift the gun from the trunnions, bodily.

3. *To dismount the wheels:* Remove the linchpins, support the carriage at the axle, and slip off the wheels.

4. *To dismount the axle:* Loosen the clamp screws one turn; back out the small keep screws four turns; pull out the axle.

To mount the various parts, proceed in the inverse order.

CLEANING AND CARE OF GUN.

After firing, wash out the bore with fresh water, using the bristle sponge, until the water comes out clean.

Scrub the breechblock and attachments with the cleaning brush and fresh water, or, if necessary, with water in which sal soda has been dissolved.

Dry all the parts with rags, after which oil with fresh oil. Keep the axle and nave boxes free from grit and thoroughly greased.

Remove all dust and grit from the trunnion seats, elevating screw, and other parts of the gun.

Cleaning powders should be rarely used on the gun; the coarser ones never. Avoid scraping with metal tools. Rust should be softened with kerosene. The parts should at all times be thoroughly oiled after freeing from dust and grit.

On the march the muzzle and breech should be kept covered with the covers furnished.

TRANSPORTATION OF THE 2-POUNDER MOUNTAIN GUN IN ROUGH COUNTRY.

The 2-pounder mountain gun is ordinarily transported by pack mules.

The complete material for the transportation of one gun and carriage, with its ammunition, consists of three pack saddles, one set of double harness, one harness sack, one pole and neck yoke, one splinter bar, four ammunition boxes holding eighteen rounds each, and one ammunition pack for six charges for immediate use with the gun.

The three saddles do not differ in form except in the supporting yokes for carrying the various parts and in minor details in the pads themselves. Upon one is carried the gun and wheels; upon the second, the carriage, the pole, splinter bar, harness sack containing harness and pole yoke, and the ammunition pack; upon the third, four ammunition boxes.

The frame of the saddle consists of two wooden side portions joined by metal yokes. These are 18 inches from center to center in the carriage and ammunition saddles, and 17⅞ inches from center to center in the gun saddle and are riveted to the side bars by iron rivets.

On each side of the ammunition saddle a steel bow spring is bolted, to which are riveted six clips to hold the ammunition boxes in place when the cincha is removed. The boxes are secured in place by leather straps attached to these clips.

The body of the saddle consists of two cotton-duck pads 23 inches wide, faced with leather on the sides and top, stuffed with tow and tufted. They vary in thickness from 3½ inches at the front lower corner to 2¼ inches at the top, and in rear from 3 inches at the lower corner to 1¼ inches at the top. These are laced to the saddle skirt with rawhide thongs, and are secured to the side bars by screws.

The body of the carriage saddle has additional thickness on the rear off side to raise the pole so that it may not strike the mule. On the near side two straps are riveted for securing the harness sack and on the off side there are two for the pole and splinter bar.

The padding on the near side of the ammunition pack is left slack through the center in order that the latigo iron may not interfere with the ammunition boxes. There is a thin

Digitized by Google

Digitized by Google

The splinter bar is of hickory and has near its center two iron eyelet straps, into which hooks from the outside of the trail engage. At the ends, and 2 feet therefrom, are mounted tug hooks for attaching the traces.

The ammunition boxes are 24 x 8 x 8 inches, with sliding covers at each end. They are arranged for carrying eighteen cartridges, nine in each compartment. There is a wrought-iron handle, secured by screws, on each end.

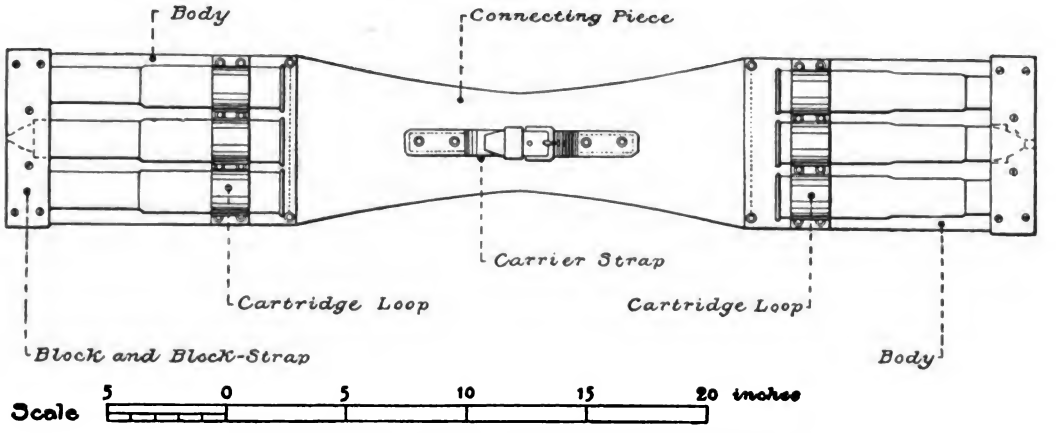

Fig. 22. Ammunition Pack for Hotchkiss 2-Pounder Mountain Gun.

The ammunition pack consists of two bodies with a connecting piece, a carrier strap, two cartridge loops, two block straps, and two blocks at the ends of the bodies, into which the heads of the projectiles fit. These blocks are secured in place by the block straps fastened to them with six brass screws each.

The bodies and carrier strap are sewed and riveted to the connecting piece, and the cartridge loops, holding three cartridges each, are sewed and riveted to the bodies. This pack is designed to be carried with the gun in order to insure always having six rounds of ammunition ready for immediate use.

MEASUREMENTS AND WEIGHTS OF HOTCHKISS 2-POUNDER MOUNTAIN GUN.

Diameter of bore between lands	inches	1.65
Diameter of bore between grooves	do	1.68
Grooves:		
Number		10
Width	inch	0.04
Depth	do	.012
Width of lands	do	.157
Twist of rifling, 1-inch	calibers	29.83
Length of rifle bore	inches	34.4
Total length of gun	do	46
Maximum diameter of breech	do	5.03
Diameter of muzzle	do	2.55
Distance of axis of trunnions from muzzle	do	27.3
Diameter of trunnions	do	1.8
Distance between rimbases	do	4.7
Length of trunnions	do	1.8
Length of line of sight	do	17.9
Line of sight from axis of bore:		
Vertical	inches	3.3
Horizontal	do	1.6

Digitized by Google

The primer, which extends through the vent opening into the breechblock, can not be inserted until the block is closed and locked.

ACTION OF THE BREECH MECHANISM.

The gun having been fired, to open the breech turn the lever handle to the rear, unlocking the block and starting it in the mortise. Draw the handle quickly to the right until the block is checked by the stop. The first motion starts the shell slowly, with powerful leverage. The stud on the extractor works in the slightly inclined guide way until the barrel is unmasked; then the sharp change in the direction causes the stud to move more rapidly to the rear, throwing the shell case clear of the gun.

To load, enter the cartridge through the loading hole; push it home till the rim of the cartridge-case head strikes the extractor hook; push the lever handle sharply to the left and lock by turning the handle to the front. Insert a primer in the vent.

THE CARRIAGE.

The carriage is of steel, consisting of two flasks, forming the stock and trail. It is stiffened with angle irons and braced by three transoms and the trail lunette ring.

All those parts subject to wear, viz, lunette ring, trunnion beds, and bearing for the elevating screw, are of steel castings. The axle is a solid steel forging, stiffened by a reenforcing plate riveted to the body of the carriage.

The elevating apparatus consists of a forked lever, pivoted at its lower rear end in brackets on the inside of the flasks, and with its upper end abutting freely against the underside of the breech. Motion is given the lever by an elevating screw, which works in a thread near its middle point. The upper end of this elevating screw terminates in a lever handle. The lower end is supported on a transom between the flasks.

Recoil is checked by rope brakes hooked to the trail handles and passed around the fellies of the wheels. During the march the rope brakes are hooked to the trail handles, passed diagonally over the trail, and secured to the hooks under the axle. The bristle sponge and rammer are carried on the right side of the trail.

THE LIMBER.

The limber consists of the framework of angle steel provided with beds for the axle. The ammunition chest, made of steel plate, is subdivided into compartments holding four ammunition boxes. The outer boxes are raised slightly above those in the middle, and may be opened without removal from the limber. The boxes are of wood, covered with waterproof canvas, and strongly ironed. Each holds eight rounds of ammunition, and there is a compartment holding a package of friction primers and the fuze case. The latter is a metallic box with compartments for five combination fuzes.

The axle is a solid steel forging. The wheels are similar to those on the carriage.

A paulin, combined prolonge and picket rope, an ax, a shovel, and a pickax are carried on the limber.

While it is designed that the limber should be drawn by the pack animals driven tandem, a pole may be fitted, and the limber may be drawn by men by the use of a drag rope, if necessary.

The ammunition boxes are so made that they may be taken from the limber and carried by pack mules.

Digitized by Google

Fig. 23 – Hotchkiss 12 Pdr (3 inch) Mountain Gun

GUN & BREECH MECHANISM

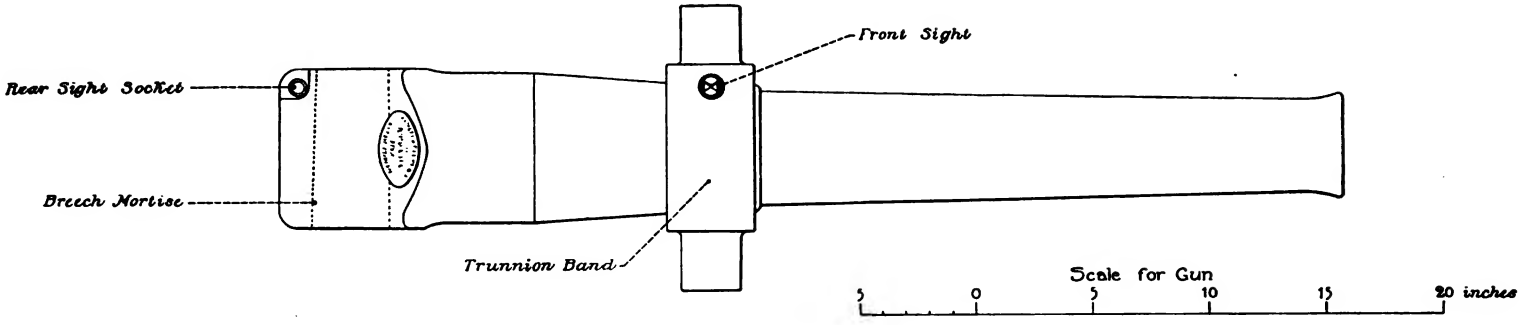

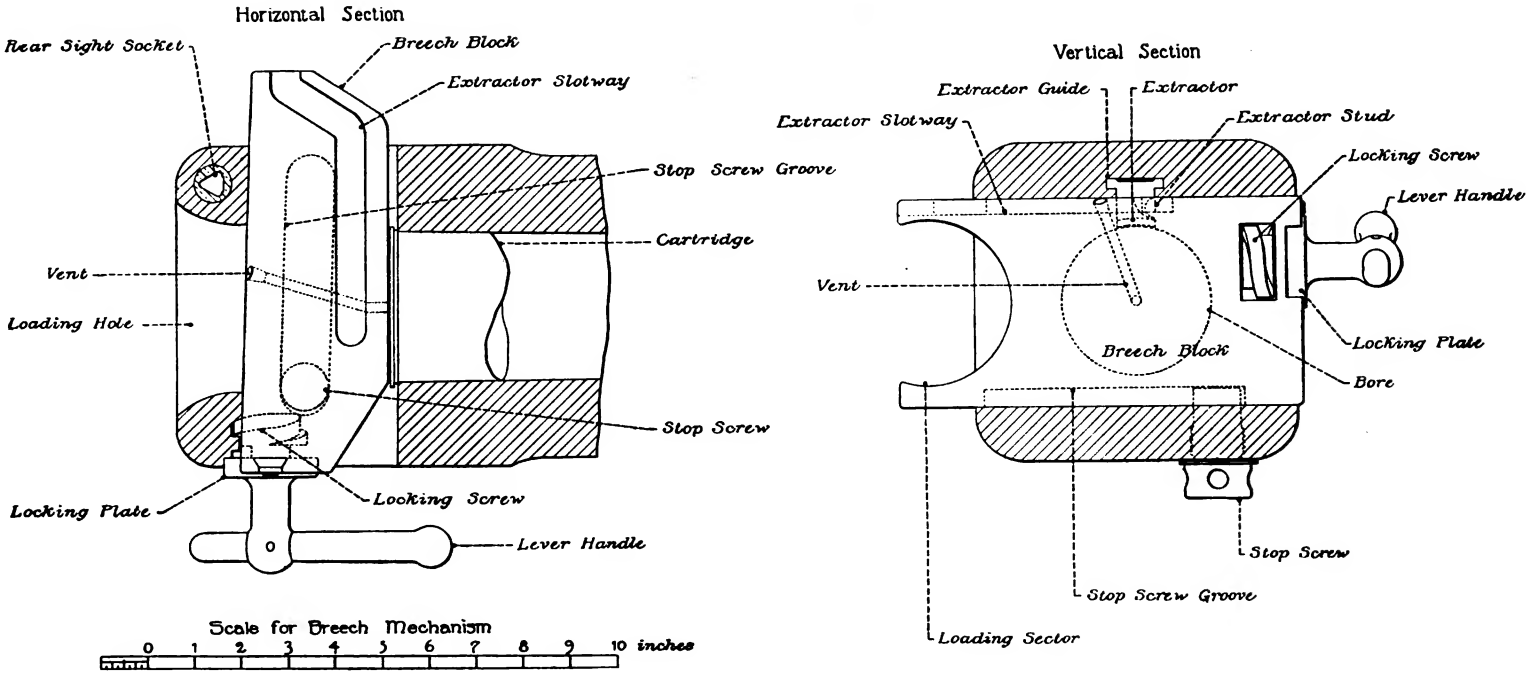

Digitized by Google

Digitized by Google

Fig. 24 – Hotchkiss 12 Pdr (3 inch) Mountain Gun.
Mountain Carriage

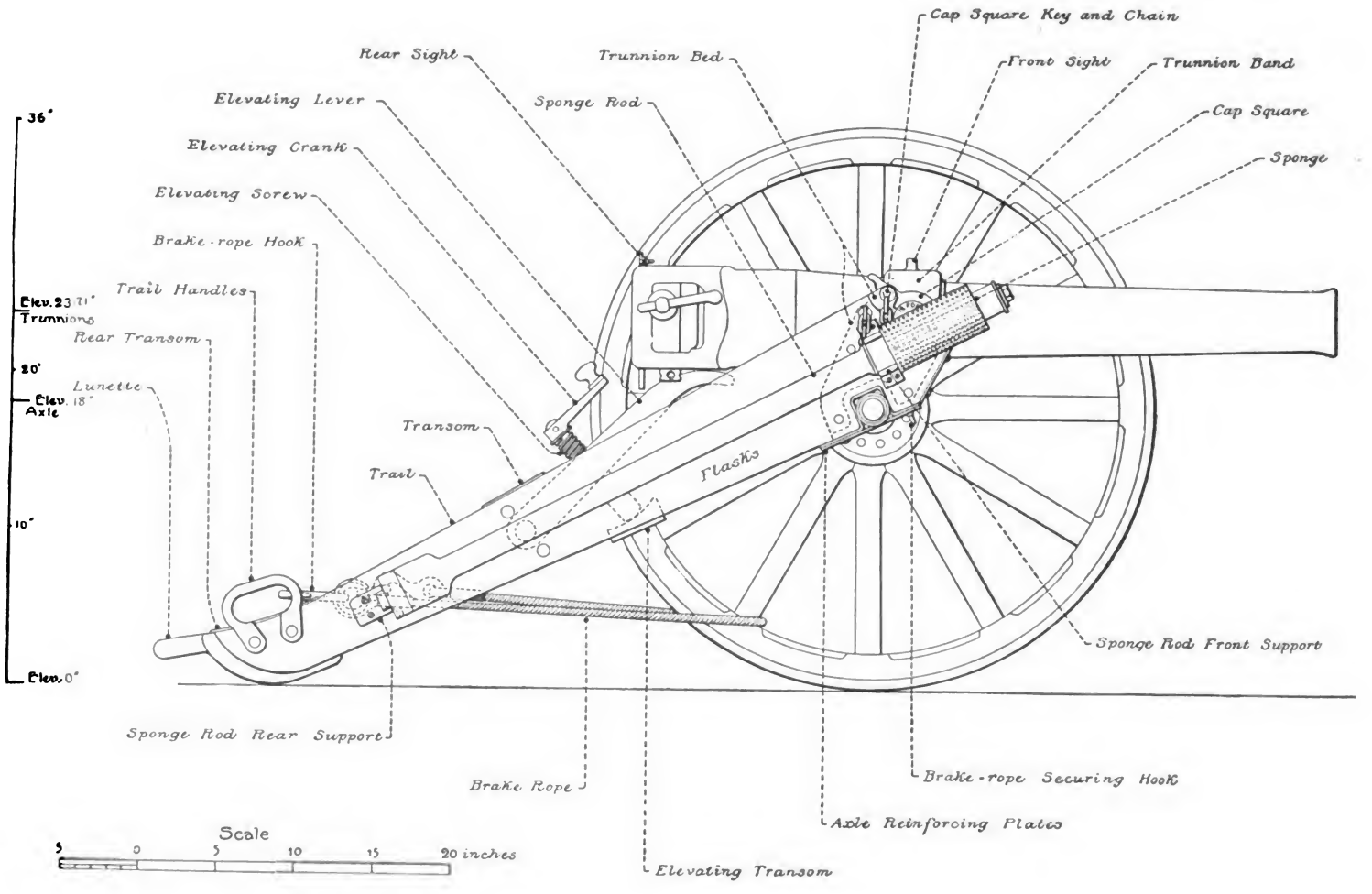

Digitized by Google

Digitized by Google

Fig 25 – Hotchkiss 12 Pdr (3 inch) Mountain Gun
Mountain Limber
FRONT VIEW

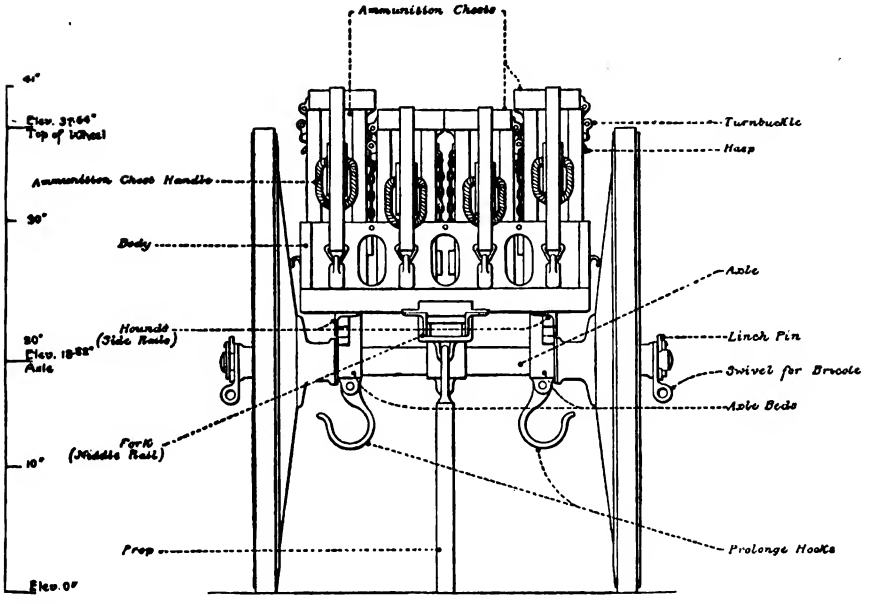

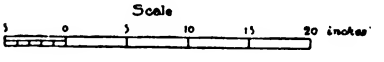

Digitized by Google

Digitized by Google

2. *To dismount the gun:* Remove the cap-squares and lift the gun from the trunnions, bodily.

3. *To dismount the wheels:* Remove the linchpins, support the carriage at the axle, and slip off the wheels.

4. *To dismount the axle:* Loosen the clamp screws one turn; back out the small keep screws four turns; pull out the axle.

To mount the various parts, proceed in the inverse order.

CLEANING AND CARE OF GUN.

After firing, wash out the bore with fresh water, using the bristle sponge, until the water comes out clean.

Scrub the breechblock and attachments with the cleaning brush and fresh water, or, if necessary, with water in which sal soda has been dissolved.

Dry all the parts with rags, after which oil with fresh oil. Keep the axle and nave boxes free from grit and thoroughly greased.

Remove all dust and grit from the trunnion seats, elevating screw, and other parts of the gun.

Cleaning powders should be rarely used on the gun; the coarser ones never. Avoid scraping with metal tools. Rust should be softened with kerosene. The parts should at all times be thoroughly oiled after freeing from dust and grit.

On the march the muzzle and breech should be kept covered with the covers furnished.

TRANSPORTATION OF THE 2-POUNDER MOUNTAIN GUN IN ROUGH COUNTRY.

The 2-pounder mountain gun is ordinarily transported by pack mules.

The complete material for the transportation of one gun and carriage, with its ammunition, consists of three pack saddles, one set of double harness, one harness sack, one pole and neck yoke, one splinter bar, four ammunition boxes holding eighteen rounds each, and one ammunition pack for six charges for immediate use with the gun.

The three saddles do not differ in form except in the supporting yokes for carrying the various parts and in minor details in the pads themselves. Upon one is carried the gun and wheels; upon the second, the carriage, the pole, splinter bar, harness sack containing harness and pole yoke, and the ammunition pack; upon the third, four ammunition boxes.

The frame of the saddle consists of two wooden side portions joined by metal yokes. These are 18 inches from center to center in the carriage and ammunition saddles, and 17⅞ inches from center to center in the gun saddle and are riveted to the side bars by iron rivets.

On each side of the ammunition saddle a steel bow spring is bolted, to which are riveted six clips to hold the ammunition boxes in place when the cincha is removed. The boxes are secured in place by leather straps attached to these clips.

The body of the saddle consists of two cotton-duck pads 23 inches wide, faced with leather on the sides and top, stuffed with tow and tufted. They vary in thickness from 3½ inches at the front lower corner to 2¼ inches at the top, and in rear from 3 inches at the lower corner to 1¼ inches at the top. These are laced to the saddle skirt with rawhide thongs, and are secured to the side bars by screws.

The body of the carriage saddle has additional thickness on the rear off side to raise the pole so that it may not strike the mule. On the near side two straps are riveted for securing the harness sack and on the off side there are two for the pole and splinter bar.

The padding on the near side of the ammunition pack is left slack through the center in order that the latigo iron may not interfere with the ammunition boxes. There is a thin

Digitized by Google

ash stick across the lower edge of the outside of the pad with its ends resting in leather sockets. It is designed to stiffen the pad and offer a support to the latigo straps.

Underneath each of the pads, in front and rear, are riveted thin, steel, stiffening springs. Upon the underside of the saddle pads are two skirts of heavy harness leather, in which are punched holes for attaching the crupper by leather lacings.

The saddle cincha is the same for all pack saddles. It is made of two thicknesses of cotton duck, 10 inches wide, with latigo iron and chapes sewed on each end, and a latigo strap sewed into the iron at one end. A circular piece of leather, 3¼ inches in diameter, with leather thong for fastening latigo straps, is sewed upon the cincha 13 inches from the latigo end of the strap.

The crupper is composed of two leather sidepieces united by a dock. The sides are lined with light leather and reenforced by strips of leather 2 inches wide, all of which are sewed together. Holes are punched through the ends for attaching it to the saddle skirt by lacings. The dock is stuffed with tow.

The cargo cincha is of two thicknesses of cotton duck, 10 inches wide, with latigo irons and straps on each end. The one for the carriage pack is 52 inches long. It is attached by screws to a block which fits between the flanges of the carriage flasks. It has in its center a slot faced with leather, which passes over the elevating screw when the carriage is packed.

The one for the gun pack is 59 inches long, faced with leather, with chapes for latigo irons at its ends, and with a slot in the center to pass over the trunnions. There are two pads of leather sewed on each side to support the wheels. The cargo cincha for the ammunition pack is 58 inches long, with latigo irons and straps, but without facings.

The belly cincha is of three thicknesses of cotton duck, 7½ inches wide, with a **D** ring and chapes sewed on each end. The one used with the gun pack has also two straps with buckles and billets sewed on each chape for securing the wheels in position.

A semicircular pad, stuffed with tow, is strapped on the gun near its breech end to protect it from being chafed by the wheels.

The wheels are retained in position by straps passing about the rims at the top, and are suspended from the gun by hub straps terminating in loops which pass over the hubs. These straps are buckled together.

The harness consists of the bridle, breast collar, traces, martingale, breeching, and pole strap.

The harness sack is of cotton duck, 33 inches long, 12 inches wide, and 7 inches deep, with four flaps to cover the harness. In it are carried the harness, neck yoke, and splinter bar.

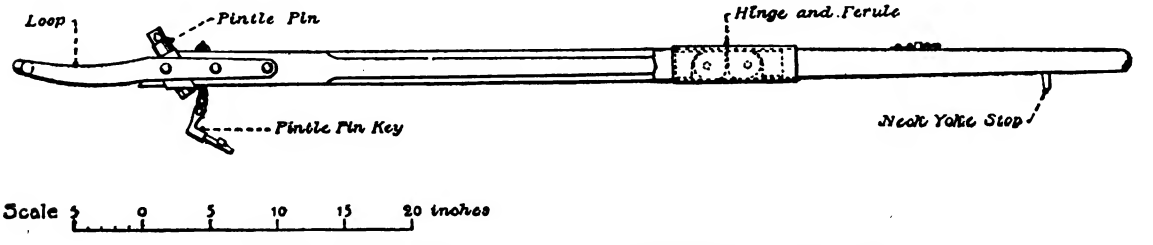

Fig. 20. Folding Pole for Hotchkiss 2-Pounder Mountain Gun Carriage.

The pole is of hickory, jointed so that it may be more readily packed, with a sliding ferrule to cover the hinge. At its rear end there is an iron clip with a pintle pin for attachment to the lunette, and at its front end is an iron stud pin for the neck-yoke stop.

The neck yoke is of hickory, with a leather neck-yoke brace encompassing the yoke, and having through its flap a hole to fit over the pole of the carriage.

Digitized by Google

Fig. 21 – Hotchkiss 2 Pdr Mountain Gun Pack – Ammunition Boxes & Pack Saddle

FRONT VIEW

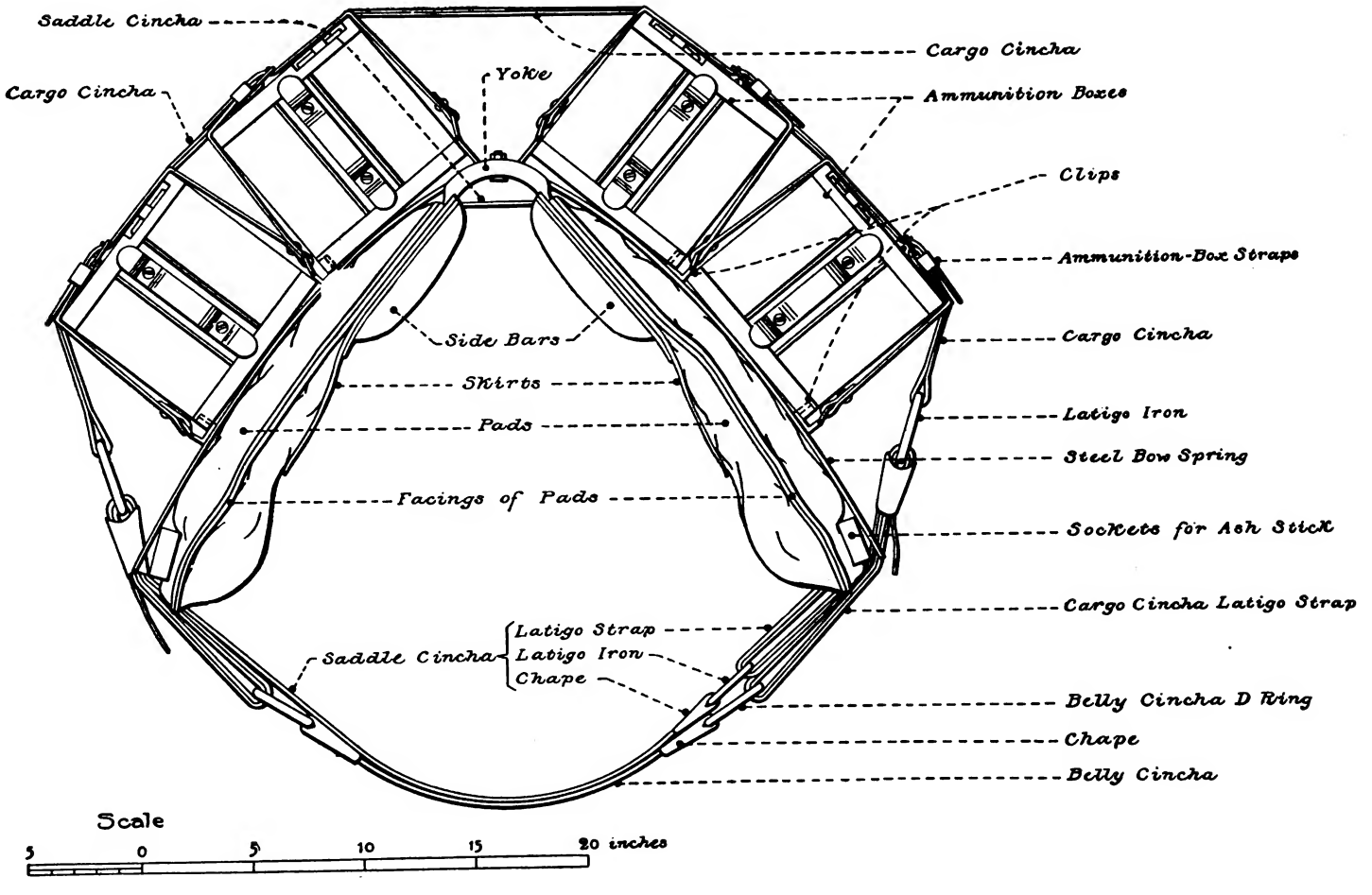

Digitized by Google

Digitized by Google

The splinter bar is of hickory and has near its center two iron eyelet straps, into which hooks from the outside of the trail engage. At the ends, and 2 feet therefrom, are mounted tug hooks for attaching the traces.

The ammunition boxes are 24 x 8 x 8 inches, with sliding covers at each end. They are arranged for carrying eighteen cartridges, nine in each compartment. There is a wrought-iron handle, secured by screws, on each end.

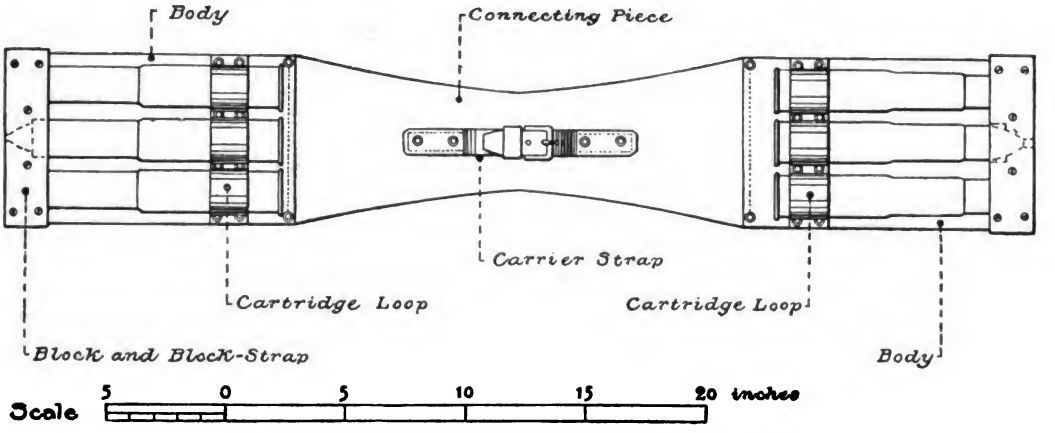

Fig. 22. Ammunition Pack for Hotchkiss 2-Pounder Mountain Gun.

The ammunition pack consists of two bodies with a connecting piece, a carrier strap, two cartridge loops, two block straps, and two blocks at the ends of the bodies, into which the heads of the projectiles fit. These blocks are secured in place by the block straps fastened to them with six brass screws each.

The bodies and carrier strap are sewed and riveted to the connecting piece, and the cartridge loops, holding three cartridges each, are sewed and riveted to the bodies. This pack is designed to be carried with the gun in order to insure always having six rounds of ammunition ready for immediate use.

MEASUREMENTS AND WEIGHTS OF HOTCHKISS 2-POUNDER MOUNTAIN GUN.

Diameter of bore between lands	inches	1.65
Diameter of bore between grooves	do	1.68
Grooves:		
Number		10
Width	inch	0.04
Depth	do	.012
Width of lands	do	.157
Twist of rifling, 1-inch	calibers	29.83
Length of rifle bore	inches	34.4
Total length of gun	do	46
Maximum diameter of breech	do	5.03
Diameter of muzzle	do	2.55
Distance of axis of trunnions from muzzle	do	27.3
Diameter of trunnions	do	1.8
Distance between rimbases	do	4.7
Length of trunnions	do	1.8
Length of line of sight	do	17.9
Line of sight from axis of bore:		
Vertical	inches	3.3
Horizontal	do	1.6

Digitized by Google

MEASUREMENTS AND WEIGHTS OF HOTCHKISS 2-POUNDER MOUNTAIN GUN—continued.

Weight of gun	pounds	121
Diameter of wheels	inches	37.4
Track of wheels	do	29.5
Weight of each wheel	pounds	66
Height of trunnion centers above ground	inches	27.9
Extreme angles of elevation or depression		−5°+15°
Weight of carriage	pounds	220
Powder chamber:		
Diameter	inches	1.8
Length	do	4.6
Capacity	cubic inches	11.71
Total capacity of bore	do	98.6
Powder charge:		
Kind of powder		Dupont HN.
Weight of charge	ounces	5.5
Density of loading		0.8127
Weight of empty shell	pounds	1.5
Weight of shell charge	ounces	1.8
Weight of fuze	do	3.5
Total weight of shell	pounds	1.9
Total weight of shell cartridge	do	2.7
Total weight of canister	do	2.8
Number of balls		30
Weight of each ball	ounce	1
Total weight of canister cartridge	pounds	3.5
Length of projectile	calibers	3.5
Travel of projectile in bore	do	22.56
Muzzle velocity	foot-seconds	1,298
Muzzle energy	foot-tons	22.8
Penetration in steel at muzzle	inches	1.3

Digitized by Google

FIRING TABLE FOR HOTCHKISS 2-POUNDER MOUNTAIN GUN.

Kind of powder, Dupont HN.
Weight of charge, 5½ ounces.
Weight of shell, 1 pound 15 ounces.
Initial velocity, 1,298 f. s.
Angle of jump, + 22 inches.
Length of line of sight, 17.93 inches.

Range.	Elevation.	Angle of fall.	Sight marks.	Drift.	Drift marks.	Time of flight.	Remaining velocity.	Dangerous space for infantry.
Yards.	*Deg. Min.*	*Deg. Min.*	*Inches.*	*Yards.*	*Inches.*	*Seconds.*	*Feet.*	*Yards.*
100	−0 12	0 12	0.000	0.1	0.008	0.1	1,243	100
200	0 0	0 23	0.000	0.1	0.009	0.4	1,191	200
300	+0 11	0 35	0.057	0.2	0.012	0.7	1,125	120
400	0 23	0 48	0.120	0.3	0.014	1.0	1,099	131
500	0 35	1 02	0.183	0.4	0.014	1.3	1,066	102
600	0 49	1 16	0.255	0.5	0.015	1.6	1,037	83
700	1 03	1 31	0.328	0.7	0.018	1.9	1,007	69
800	1 17	1 53	0.401	0.9	0.020	2.2	984	56
900	1 32	2 16	0.479	1.2	0.024	2.5	961	46
1,000	1 48	2 39	0.562	1.5	0.026	2.8	942	40
1,100	2 04	3 02	0.646	2.0	0.033	3.1	922	34
1,200	2 21	3 27	0.735	2.5	0.037	3.4	902	30
1,300	2 39	3 53	0.829	3.2	0.044	3.8	886	27
1,400	2 57	4 22	0.923	3.9	0.050	4.1	869	24
1,500	3 16	4 48	1.022	4.6	0.055	4.5	853	22
1,600	3 36	5 19	1.127	5.5	0.062	4.9	837	20
1,700	3 57	5 50	1.237	6.1	0.065	5.3	823	18
1,800	4 18	6 22	1.347	7.0	0.070	5.7	810	16
1,900	4 39	6 55	1.457	8.0	0.076	6.1	797	15
2,000	5 01	7 28	1.572	9.0	0.081	6.5	784	14
2,100	5 23	8 02	1.688	10.0	0.086	6.9	771	13
2,200	5 47	8 36	1.814	11.0	0.090	7.3	758	12
2,300	6 11	9 14	1.941	13.0	0.102	7.7	748	11
2,400	6 36	9 57	2.073	15.0	0.113	8.1	735	10
2,500	7 01	10 36	2.205	17.0	0.123	8.5	722	10
2,600	7 27	11 18	2.342	20.0	0.139	8.9	712	9
2,700	7 53	12 00	2.480	22.0	0.151	9.3	702	9
2,800	8 20	12 42	2.624	24.0	0.155	9.8	689	8
2,900	8 48	13 26	2.773	26.0	0.163	10.2	679	8
3,000	9 17	14 10	2.928	28.0	0.170	10.6	669	7
3,200	10 15	15 39	3.239	35.0	0.199	11.6	650	6
3,400	11 16	17 11	3.569	41.0	0.221	12.6	630	6
3,600	12 20	18 45	3.917	48.0	0.245	13.5	610	5
3,800	13 27	20 20	4.284	57.0	0.277	14.5	591	5
4,000	14 35	22 00	4.996	70.0	0.325	15.5	571	4

THE HOTCHKISS 12-POUNDER MOUNTAIN GUN.

The gun is composed of the body of the gun and the breech mechanism.

The body of the gun consists of the main tube, which is a single forging, and the trunnion hoop, which is screwed upon it.

The breech mechanism is similar to that for the 2-pounder mountain gun.

The stop screw is inserted from below and engages in a groove in the under face of the block. It limits the lateral movement. It is secured against accidental unscrewing by a spring washer.

The vent through the breechblock is in prolongation of that through the breech, till it reaches the axis of the bore a little in rear of the front face of the block. From that point it follows the axis of the bore.

Digitized by Google

The primer, which extends through the vent opening into the breechblock, can not be inserted until the block is closed and locked.

ACTION OF THE BREECH MECHANISM.

The gun having been fired, to open the breech turn the lever handle to the rear, unlocking the block and starting it in the mortise. Draw the handle quickly to the right until the block is checked by the stop. The first motion starts the shell slowly, with powerful leverage. The stud on the extractor works in the slightly inclined guide way until the barrel is unmasked; then the sharp change in the direction causes the stud to move more rapidly to the rear, throwing the shell case clear of the gun.

To load, enter the cartridge through the loading hole; push it home till the rim of the cartridge-case head strikes the extractor hook; push the lever handle sharply to the left and lock by turning the handle to the front. Insert a primer in the vent.

THE CARRIAGE.

The carriage is of steel, consisting of two flasks, forming the stock and trail. It is stiffened with angle irons and braced by three transoms and the trail lunette ring.

All those parts subject to wear, viz, lunette ring, trunnion beds, and bearing for the elevating screw, are of steel castings. The axle is a solid steel forging, stiffened by a reenforcing plate riveted to the body of the carriage.

The elevating apparatus consists of a forked lever, pivoted at its lower rear end in brackets on the inside of the flasks, and with its upper end abutting freely against the underside of the breech. Motion is given the lever by an elevating screw, which works in a thread near its middle point. The upper end of this elevating screw terminates in a lever handle. The lower end is supported on a transom between the flasks.

Recoil is checked by rope brakes hooked to the trail handles and passed around the fellies of the wheels. During the march the rope brakes are hooked to the trail handles, passed diagonally over the trail, and secured to the hooks under the axle. The bristle sponge and rammer are carried on the right side of the trail.

THE LIMBER.

The limber consists of the framework of angle steel provided with beds for the axle. The ammunition chest, made of steel plate, is subdivided into compartments holding four ammunition boxes. The outer boxes are raised slightly above those in the middle, and may be opened without removal from the limber. The boxes are of wood, covered with waterproof canvas, and strongly ironed. Each holds eight rounds of ammunition, and there is a compartment holding a package of friction primers and the fuze case. The latter is a metallic box with compartments for five combination fuzes.

The axle is a solid steel forging. The wheels are similar to those on the carriage.

A paulin, combined prolonge and picket rope, an ax, a shovel, and a pickax are carried on the limber.

While it is designed that the limber should be drawn by the pack animals driven tandem, a pole may be fitted, and the limber may be drawn by men by the use of a drag rope, if necessary.

The ammunition boxes are so made that they may be taken from the limber and carried by pack mules.

Digitized by Google

Fig. 23 – Hotchkiss 12 Pdr (3 inch) Mountain Gun

GUN 3S · BREECH MECHANISM

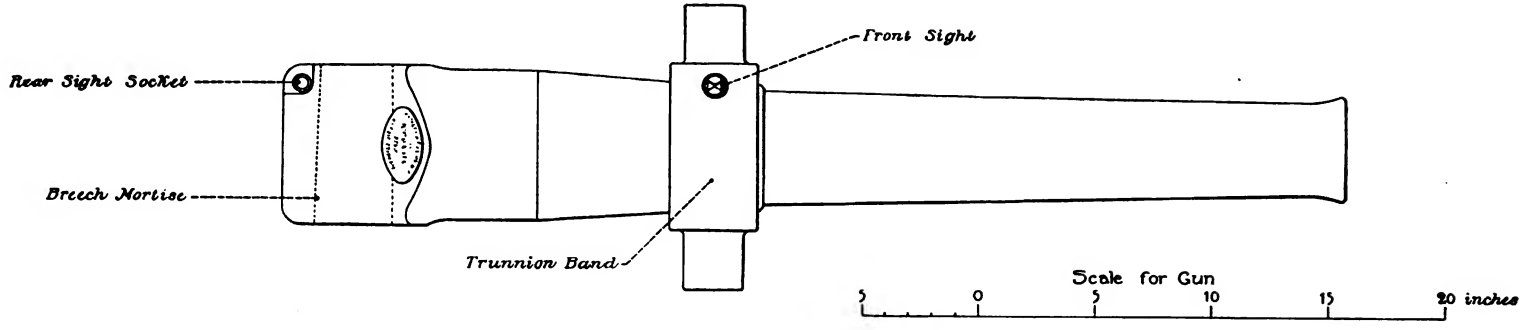

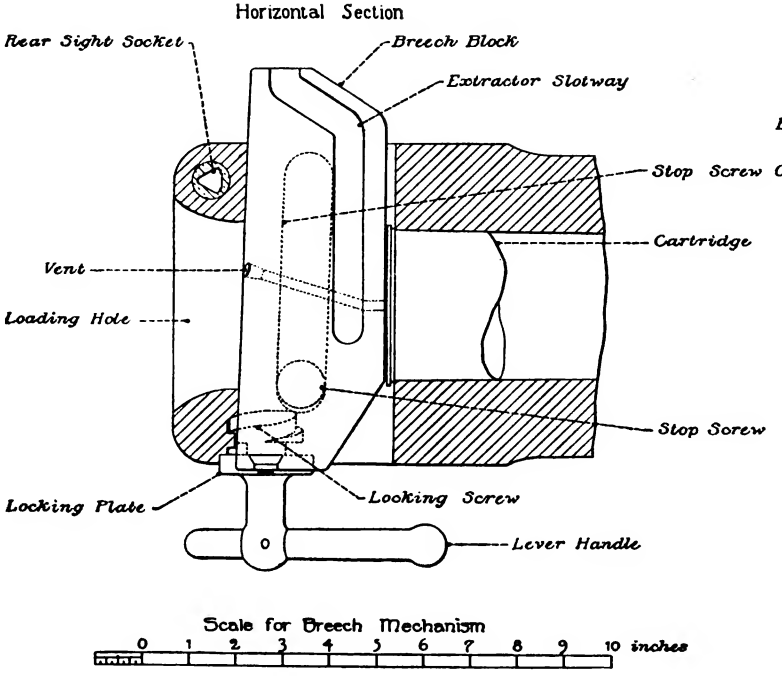

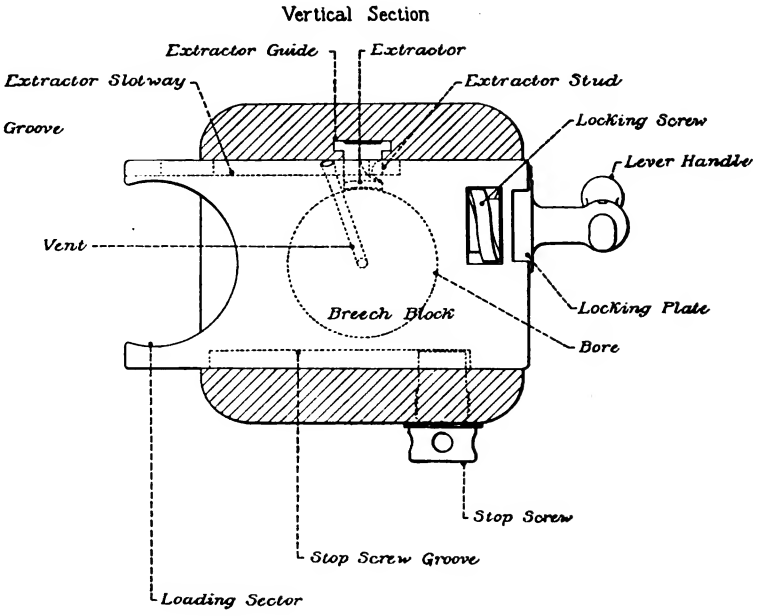

Digitized by Google

Digitized by Google

Fig. 24 – Hotchkiss 12 Pdr (3 inch) Mountain Gun.
Mountain Carriage

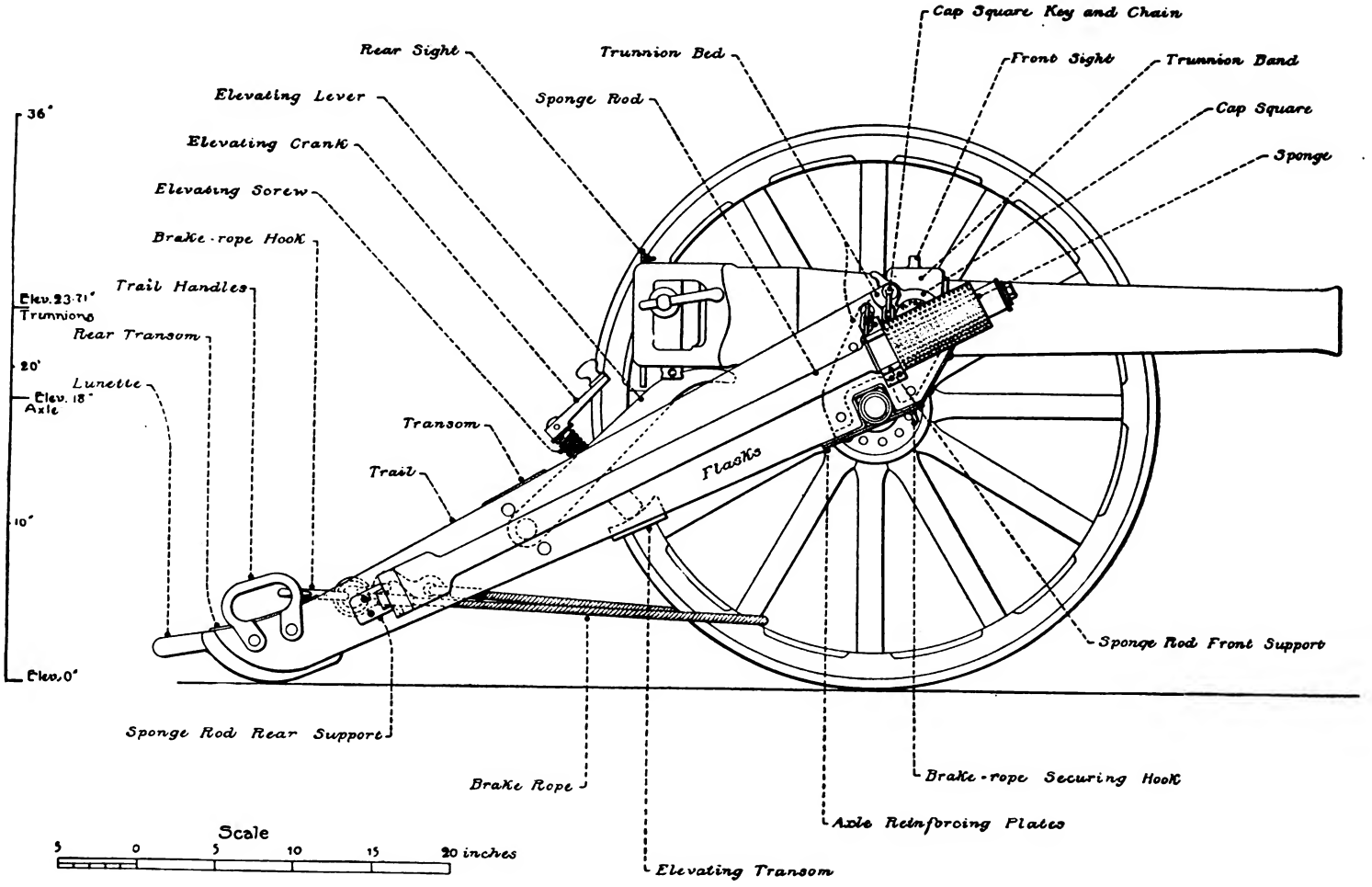

Digitized by Google

Digitized by Google

Fig 25 – Hotchkiss 12 Pdr (3 inch) Mountain Gun
Mountain Limber
FRONT VIEW

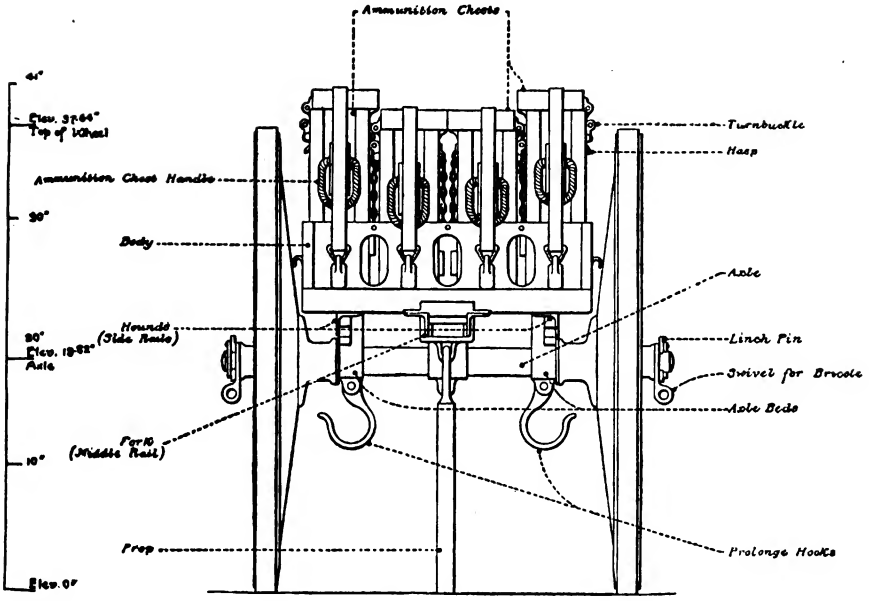

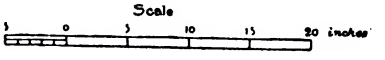

Digitized by Google

Digitized by Google

When transportation by pack animals is resorted to, there should be for each gun: One gun mule; one wheel, shaft, and accessory mule; one carriage mule, and the necessary mules for a full supply of ammunition. Similar pack saddles to those for the 2-pounder gun should be used.

THE AMMUNITION.

The cartridge consists of three main portions—the cartridge case, the charge, and the projectile.

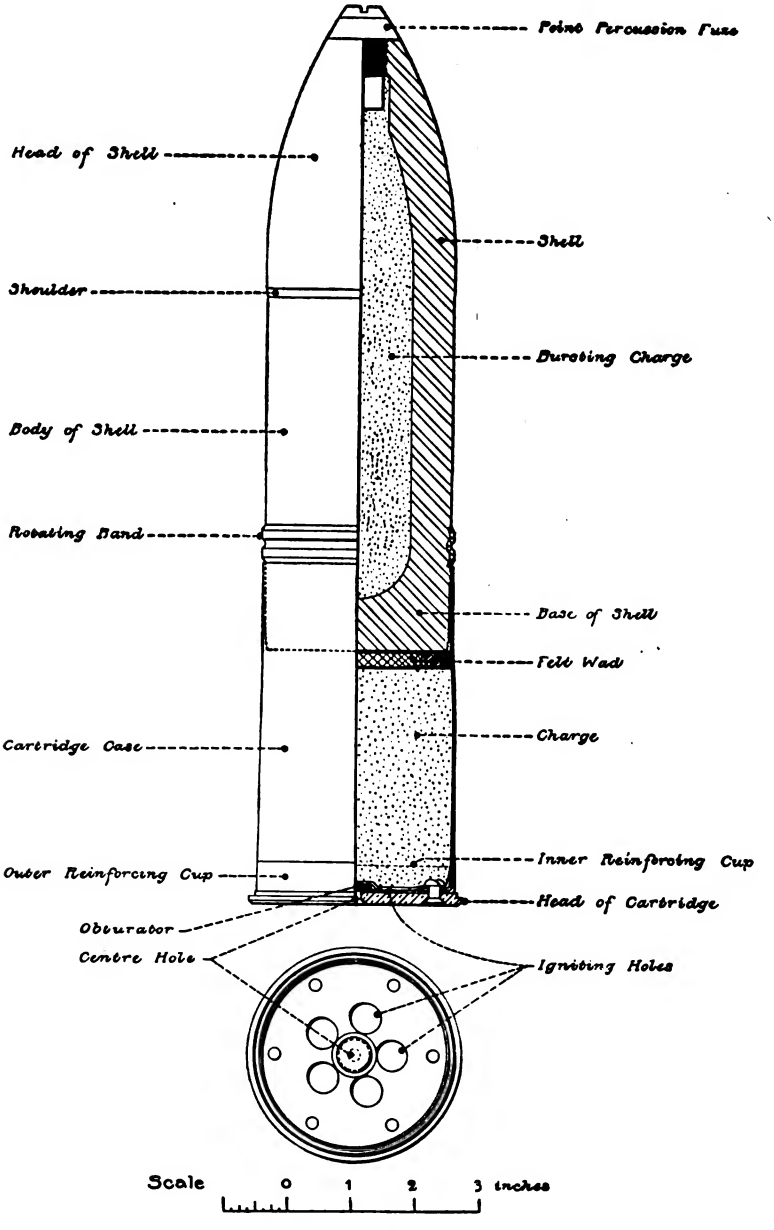

Fig. 26. Shell for Hotchkiss 12-Pounder Mountain Gun.

Digitized by Google

The body of the cartridge case is drawn from a sheet of brass in one piece. It is reenforced at the base by inside and outside cups, also of brass. The head is attached to the body by three brass rivets which unite the case, cups, and head.

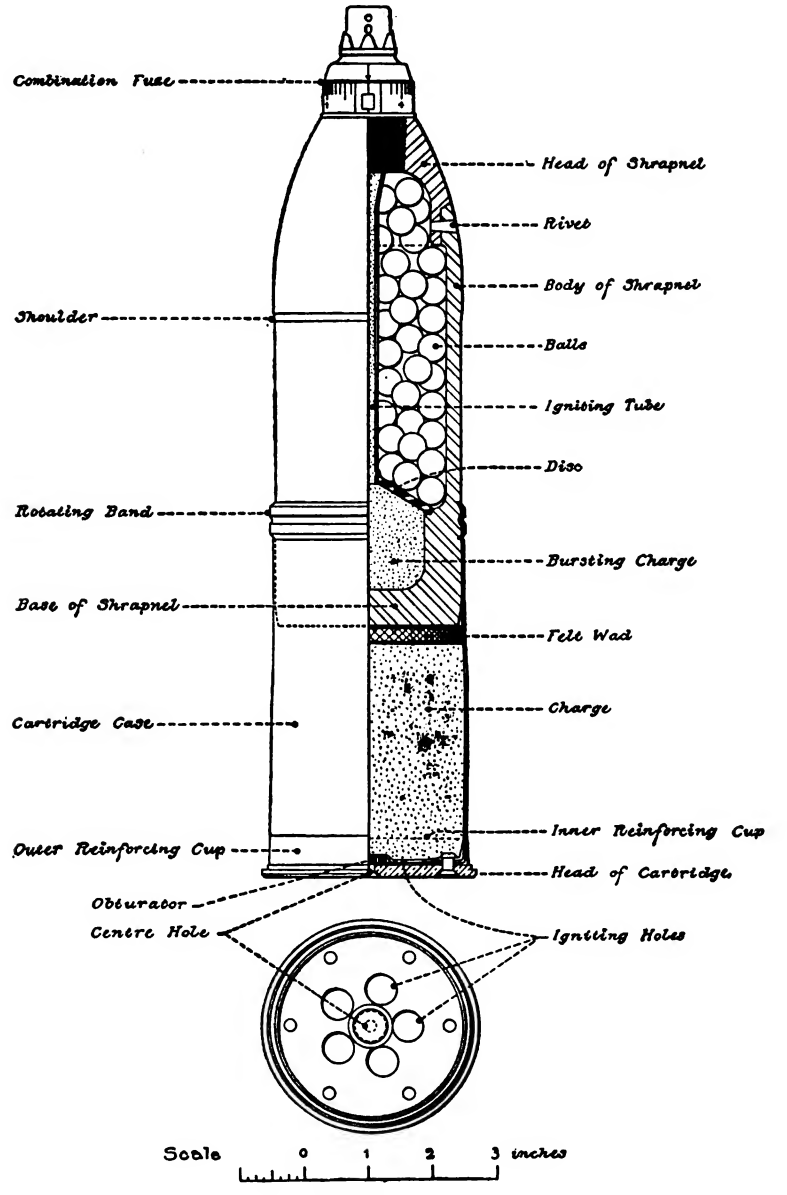

Fig. 27. Shrapnel for Hotchkiss 12-Pounder Mountain Gun.

The vent is pierced through the center of the head, and five ignition holes in the inside reinforcing cup give the flame from the primer access to the charge, the pressure from which in turn forces back the center of the cup so as to seal the venthole in the head.

Digitized by Google

The charge consists of about 14 ounces of a suitable large-grain powder, similar to that employed in field guns. It is well shaken down and separated from the base of the projectile by a felt wad. The vent in the head is sealed with a thin coating of wax.

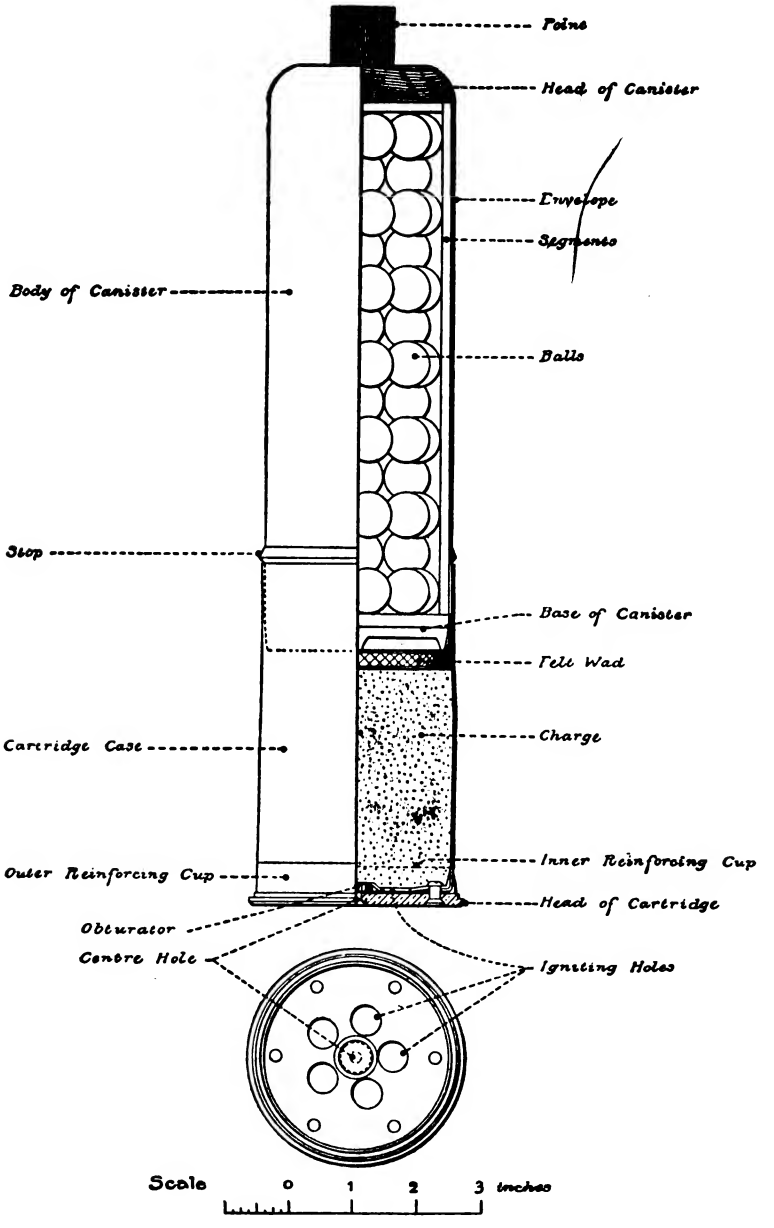

Fig. 28. Canister for Hotchkiss 12-Pounder Mountain Gun.

Three forms of projectiles are used—the common shell, shrapnel, and canister.

The common shell is of cast iron of cylindro-ogival pattern, with copper rotating band and point-percussion fuze. It contains a bursting charge of about 6.3 ounces of fine-grain powder.

Digitized by Google

The shrapnel is made of cast iron. It consists of the body, to which the head is attached by three copper rivets. It is loaded with 160 hardened lead balls with a sulphur matrix. In the chamber in the base is a bursting charge of about 1¾ ounces of fine-grain powder. A central ignition tube connects this chamber with the point-combination fuze. A wooden plug is used in the point for purposes of transportation, and the fuze is inserted on the battlefield.

The canister consists of a thin brass envelope with six wrought-iron segmental linings. The head is of wood with a false point to make it of the same length as the common shell to simplify packing. On the body is an annular stop corresponding to the rotating ring, to insure uniform density of loading. The case contains 125 hardened lead balls.

FUZES.

The fuzes are of two kinds—a point-percussion fuze and a combination time and percussion fuze. The point-percussion fuze is similar to that used in the 2-pounder gun.

THE COMBINED TIME AND PERCUSSION FUZE.

The combined time and percussion fuze is of the Elswick pattern. It consists of three main parts—the cap, the collar, and the body.

The body is of soft composition metal. The lower portion is a hollow cylinder threaded on its exterior to fit the shrapnel. Above this it is larger, cylindrical, and of the diameter of the head of the projectile at the point of insertion. Above this it is smaller, cylindrical, and threaded on its exterior to fit the cap.

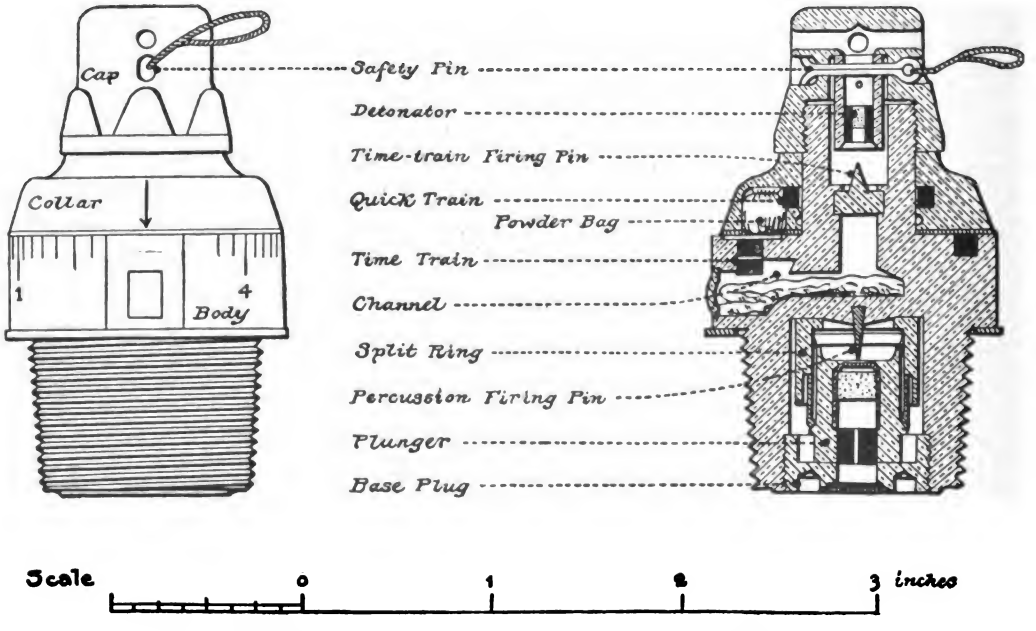

Fig. 29. Elswick Combination Fuse for Hotchkiss 12-Pounder Mountain Gun.

In the hollow lower cylinder is the percussion device. In the middle portion or larger cylinder is the time device, and in the upper, or small cylinder, the concussion igniting apparatus.

The cap is of brass. It has an axial, cylindrical cavity, in which is mounted a concussion plunger with a detonating cap on its underside. The plunger is held in the cap by a small

Digitized by Google

brass wire. There is also, passing transversely through it and the cap, a copper-wire safety loop, to be removed before firing, when it is desired to use the time action.

The upper cylinder is threaded on its exterior to receive the cap section. It is hollow, and has mounted in it a pointed anvil firing pin, on which the concussion plunger strikes at the discharge of the gun. About this firing pin is a passage for the gases to a channel connected with the time train.

The middle section carries on its cylindrical exterior a graduation of inches and tenths. In its upper surface is a circular groove interrupted for a short segment, filled with time composition of slow-burning powder. Below this, in the body of this section, is a radial groove connecting the time groove at its zero point with the axial vent about the concussion firing pin above referred to.

Between the cap and the middle section is a brass ring carrying an arrow for setting to points in the time scale. It is held in place by screwing the cap down firmly upon it. A leather washer makes a gas-tight joint between this ring and the middle section. Within the surface of this ring, opposite the arrow, and in contact with the time train, is a bag containing quick-burning powder. A hole in the washer permits the flame to pass from the time train to the quick-burning powder in this bag. The seat of the latter is connected with an annular ring of quick-burning powder on the inner surface of this brass ring. Opposite the ring of powder in one side of the upper cylinder is an aperture connecting by a longitudinal channel with the chamber in the lower cylinder, in which is located the percussion device.

The percussion device in the lower section consists of a soft-metal percussion plunger containing at its upper end a detonating cap, and in its lower end a small powder charge. About this plunger is a small split brass ring resting at its lower end against a slight ridge or swell on the plunger, and at its upper end against a heavier brass collar. It is thus held from contact with the pointed anvil mounted in the roof of the cavity in the lower section. The bottom of the cavity is closed by a brass screw plug, through the center of which is drilled a hole covered by a thin sheet-brass cap, pressed in and secured by shellac.

Upon discharge of the gun the brass ring forces back with it the split ring, which opens out and passes over the swell in the plunger.

Upon impact of the shell the plunger continues its forward motion; the cap strikes on the pointed anvil, explodes, and ignites the charge of powder in the plunger, which blows out the cover cap of the aperture in the screw plug, through which the gas passes to the bursting charge in the shell.

TO USE THE TIME DEVICE.

Screw the fuze into the shell; remove the safety wire from the cap section and set the arrow opposite the point in the time train corresponding to the desired interval before bursting after discharge. To do this, slightly unscrew the cap section and turn the arrow of the indicator ring to the desired point; then tighten the cap section, holding the indicator ring against turning by the spandrel wrench.

The action of the time device is as follows: When the gun is discharged the concussion plunger breaks its retaining wire and strikes upon its pointed anvil; the cap in the plunger is exploded, and its flame passes about the anvil through the radial channel to the time train, which burns until it reaches the little bag of quick powder in the indicator ring; this in turn is ignited, and burns around to the longitudinal channel connecting with the percussion chamber. It passes through this and blows out the thin brass covering cap in the percussion-chamber screw plug. Through the vent thus formed it passes to the bursting charge in the shell.

The time device may be used in combination with the percussion apparatus, the latter coming into play in event of the other failing. Or the safety wire need not be taken out and

Digitized by Google

the time device set at the blank portion between the highest reading and the zero, when the percussion device only will be used.

WEIGHTS, MEASUREMENTS, ETC., OF HOTCHKISS 12-POUNDER MOUNTAIN GUN, CARRIAGE, AND PACK.

Caliber of gun	inches	3.
Total length of gun	do	45.1
Length of bore	calibers	13.48
Pitch of rifling	degrees	7
Length of line of sight	inches	17.56
Total weight of gun	pounds	218
Maximum diameter of breech	inches	6.7
Diameter of muzzle	do	3.94
Diameter of trunnions	do	2.56
Length of trunnions	do	2.44
Distance between rimbases	do	7.09
Distance of axis of trunnion from muzzle	do	26.5
Rifling:		
Number of grooves		24
Width of grooves	inch	0.276
Depth of grooves	do	0.026
Width of lands	do	0.117
Twist of rifling, 1-inch	calibers	25.59
Powder chamber:		
Diameter	inches	3.161
Length	do	3.72
Capacity	cubic inches	27.12
Total capacity of bore	do	292.00
Weight of cartridge case	pounds	1.19
Total weight of complete cartridge	do	14
Total length of complete cartridge	inches	14.1
Powder charge:		
Kind of powder		IK Granular.
Weight of charge	ounces	14
Density of loading		0.9
Projectile:		
Weight of projectile (filled)	pounds	12
Ratio of weight to weight of piece		$\frac{1}{19}$
Weight of bursting charge	ounces	6.3
Length of projectile	calibers	3.5
Sectional density $\frac{W}{d^2}$		1.3333
Bursting charge, common shell	ounces	6.3
Bursting charge, shrapnel	do	1¾
Number of balls in shrapnel		160
Number of balls in canister		125
Travel of projectile in bore	calibers	12.243
Muzzle velocity	foot-seconds	870
Pressure per square inch in powder chamber	pounds	14,560
Muzzle energy	foot-tons	63
Penetration in steel at muzzle	inches	1.4
Range:		
Mounted on carriage (elevation 20°)	yards	3,680
Extreme limit	do	4,990
Length of carriage body	inches	52.75
Weight of carriage body	pounds	205
Weight of sponge and rod	do	4.5
Weight of two wheels	do	123
Total weight of carriage	do	332
Height of trunnion centers above ground	inches	23.7
Diameter of wheels	do	36
Length of axle	do	35.9
Vertical field of fire		+20° / −10°

Digitized by Google

WEIGHTS, MEASUREMENTS, ETC., OF HOTCHKISS 12-POUNDER MOUNTAIN GUN, CARRIAGE, AND PACK—continued.

Weight of limber body	pounds	262
Weight of two wheels	do	128
Weight of four boxes	do	128
Weight of limber complete	do	554
Number of rounds carried		32
Weight of limber fully equipped	pounds	1,005
Weight of a pair of ammunition boxes fully loaded	do	280
Weight of gunner's haversack, filled	do	6.5
Weight of cannoneer's haversack, filled	pounds	4.75
Weight of pack saddle and harness for gun	do	69
Weight of pack saddle and harness for carriage	do	69
Weight of pack saddle for wheels and shafts	do	60
Weight of pack saddle for ammunition chests	do	58

FIRING TABLE FOR HOTCHKISS 12-POUNDER MOUNTAIN GUN.

Charge, 14.1 ounces. Initial velocity, 858 feet per second.
Projectile, 12 pounds. Angle of jump, 0° 39′.
Length of line of sight, 17.56 inches.

Range.	Angle of departure.	Elevation.	Sight marks.	Drift.	Deflection.	Time of flight.	Fuze scale.	Angle of fall.	Rem'g velocity.
Yards.	*Deg. Min.*	*Deg. Min.*	*Inches.*	*Feet.*	*Millimeters.*	*Seconds.*	*Inches.*	*Deg. Min.*	*Feet.*
0	0 0	0 0	0.000	Right.	Left.	0.0	0.00	0 0	858
100	0 23	-- --	-----	0.1	0.3	0.3	0.14	-- --	842
200	0 46	0 7	0.036	0.2	0.2	0.7	0.34	-- --	831
300	1 10	0 31	0.158	0.4	0.2	1.1	0.55	-- --	821
400	1 34	0 55	0.281	0.7	0.3	1.4	0.76	-- --	811
500	1 59	1 20	0.409	1.1	0.3	1.8	0.99	2 10	801
600	2 24	1 45	0.536	1.6	0.4	2.2	1.22	-- --	791
700	2 50	2 11	0.670	2.2	0.5	2.6	1.46	-- --	782
800	3 16	2 37	0.803	3.0	0.6	3.0	1.69	-- --	773
900	3 42	3 3	0.936	3.9	0.7	3.4	1.91	-- --	764
1,000	4 9	3 30	1.074	4.9	0.7	3.8	2.12	4 32	755
1,100	4 37	3 58	1.218	6.0	0.8	4.2	2.33	-- --	746
1,200	5 5	4 26	1.361	7.2	0.9	4.6	2.54	-- --	737
1,300	5 33	4 54	1.504	8.5	1.0	5.0	2.75	-- --	728
1,400	6 2	5 23	1.655	9.9	1.1	5.4	2.96	-- --	719
1,500	6 32	5 53	1.810	11.5	1.2	5.8	3.16	7 19	710
1,600	7 2	6 23	1.965	13.3	1.3	6.3	3.36	-- --	702
1,700	7 33	6 54	2.125	15.3	1.4	6.7	3.57	-- --	694
1,800	8 5	7 26	2.291	17.5	1.5	7.2	3.78	-- --	685
1,900	8 37	7 58	2.458	19.8	1.6	7.6	3.99	-- --	678
2,000	9 10	8 31	2.630	22.3	1.7	8.1	4.20	10 44	670
2,100	9 44	9 5	2.807	25.1	1.8	8.5	----	-- --	662
2,200	10 19	9 40	2.991	28.1	1.9	9.0	----	-- --	654
2,300	10 54	10 15	3.175	31.3	2.1	9.5	----	-- --	646
2,400	11 30	10 51	3.366	34.8	2.2	10.0	----	-- --	638
2,500	12 7	11 28	3.562	38.5	2.3	10.5	----	14 39	630
2,600	12 45	12 6	3.765	42.5	2.5	11.0	----	-- --	623
2,700	13 25	12 46	3.979	46.8	2.7	11.6	----	-- --	616
2,800	14 6	13 27	4.200	51.5	2.8	12.1	----	-- --	609
2,900	14 48	14 9	4.427	56.6	3.0	12.7	----	-- --	601
3,000	15 31	14 52	4.661	62.1	3.2	13.2	----	19 27	594
3,100	16 16	15 37	4.908	68.1	3.4	13.8	----	-- --	587
3,200	17 2	16 23	5.163	74.5	3.6	14.4	----	-- --	580
3,300	17 49	17 10	5.425	81.4	3.9	15.0	----	-- --	573
3,400	18 38	17 59	5.700	88.9	4.1	15.6	----	-- --	567
3,500	19 29	18 50	5.989	97.0	4.4	16.3	----	25 3	560

Digitized by Google

NOTES ON PACKING.

Before putting on the pack saddle great care should be taken that the hair on the mule's back lies smoothly; that the blanket is without wrinkles, and that it is a little loose over the spine that it may not be drawn down thereon in packing. The saddle should be carefully and securely fastened. The mule should then be allowed to stand whilst the other mules are being saddled. The girth should be again tightened before the pack is put on.

In arranging the load it should be symmetrically disposed with the center of gravity as low as possible, without compressing the vital parts of the mule. Never use a heavy piece for the top pack if it can be avoided. Great care must be had that the pack is securely lashed, and if, during travel, it works at all loose, the lash cincha should be at once tightened.

Each mule should have fitted to it a special pack saddle, and thereafter the saddle should not be changed, as the stuffing becomes shaped to the mule.

The load should be thrown on the back and sides, and not on the spine. Pack saddles should be properly stuffed with tow, wool, or prairie grass of a springy nature, and great care should be had that nothing hard or stiff enters into the stuffing.

Should galls appear on the mule, the pressure should be relieved from them by rearranging the stuffing of the pad.

Great care is necessary that the under surface of the pads, and especially the crupper, is kept perfectly clean.

Newly stuffed aparejos should, if possible, have light loads when first used. As the stuffing fits itself to the conformation of the mule, additions can be made if necessary. After being thoroughly adjusted little change is required in the saddles unless they become hard.

Stiffness in the pad should be obtained from the leather and the firmness of the filling rather than from ribs inserted for the purpose.

Lash-rope cinchas and girths must fit smoothly under the body, and be drawn more tightly than with the ordinary riding saddle. Lashings should be tightened shortly after the pack train moves from camp.

The crupper should not be tighter than is necessary to keep the saddle from moving forward.

Loads should, if possible, not be greater than 250 pounds. Three hundred and fifty pounds are only admissible for short journeys. Heavier loads can be carried on good roads.

Where practicable, after unpacking, mules should be allowed to run loose before tying up, that they may roll.

In warm climates early marching is preferable to divided marches with noon rest. The load should always be adjusted so that it will not rock.

Until mules are trained to move in column they should be led. They should be taught to keep a distance of about one yard from nose to croup.

If a mule be fallen out for readjustment of pack, his place in column should be regained slowly.

The gait for the march should be about 4 miles an hour.

If water be available, animals should be watered about an hour after starting on the march.

When halted, care must be had that the mules do not lie down with their loads.

If a mule with a heavy pack falls, hold his head down and remove the pack before allowing him to rise. The motion in itself would so disarrange the packing as to either gall the mule or necessitate readjustment of the pack in a very short time.

After crossing fords packs should be examined, as the high action of mules in passing through water is likely to unsteady them.

Digitized by Google

In marching with troops, where the noon halt is made, if time will allow, the mule should be unpacked and the cincha straps slackened.

Mules with long packs, such as guns and carriage shafts, need to be most tightly girthed.

After removing the pack, the pack saddle, should not be taken off at once, but girths should be loosened one or two holes. An interval of at least fifteen minutes should be given to allow the mules to cool off. If possible, an interval should be given for cooling before mules are fed or watered.

As soon as the pack saddles are removed the backs should be examined, and if there is any appearance of galling, remedies should be applied and the saddles examined to ascertain the cause.

A mule should never be turned loose with a rope around his neck. A halter headstall, to be worn constantly, and a long shank with a strong snap hook, is the best arrangement. The shanks are only used when the mules are tied up for the night, or when being groomed or fed. They are unsnapped for the march or when the animal is grazing.

After removing the pack saddles they should be set up in line with the two sides separated, that air may thoroughly dry them. The crupper should be turned back upon the saddle to dry. All parts should be thoroughly cleaned.

A pack train of any size should have a bell horse. The mules soon become attached to him, and will follow him everywhere. They should be taught to line up beside him at the aparejos to be tied and fed. They soon become accustomed to this, and will fall in almost as quickly as a company of soldiers.

Digitized by Google

Digitized by Google

CHAPTER IV.

FIELD CANNON AND CARRIAGES.

The breech-loading field cannon adopted for the United States service are the 3.2-inch gun, the 3.6-inch gun, and the 3.6-inch mortar.

THE 3.2-INCH B. L. FIELD GUN.

The 3.2-inch gun is a breech-loading rifle, weighing, approximately, 830 pounds, intended for use in the field with troops moving rapidly. There are two principal forms: First, the model of 1885, composed of the tube, jacket, trunnion hoop, sleeve, key ring, locking ring, base ring, or breech bushing, vent bushing, and breech mechanism; second, the model of 1890, in which the body of the gun is composed of only two principal forgings—the tube and the jacket, the latter bearing the trunnions.

The model of 1885 is of the breech-insertion pattern, in which, in manufacture, the tube is inserted into the jacket through the breech, abutting against a shoulder in the jacket. In it the breechblock engages in a breech bushing, which transmits the longitudinal stress to the jacket.

In the 1890 model, the guns are constructed by muzzle insertion, in which the tube is entered from the front, and the shoulder in the jacket is in front of the trunnions. The breechblock engages directly in the jacket without the intervention of a bushing.

In the 1885 model the powder chamber is a truncated ellipsoid, connected with the shot chamber by a conical slope. The shot chamber is cylindrical and connected with the main bore by a second conical slope.

In the 1890 model the main chamber is made cylindrical, with a conical slope; the front of this slope is connected with the main bore by a long, conical surface, in which the rifling passes from .02 to .05 of an inch its full depth.

BREECH MECHANISM.

The principal parts of the breech mechanism are: The breechblock, carrier ring, obturator, lever handle, block handle, and vent cover.

The principal parts of the breechblock are: The three threaded sectors, three slotted sectors, obturator-spindle recess, lever-handle lugs, nose, stop groove, latch groove, locking recess, and the guide groove.

The threaded and slotted sectors permit of the entry of the block past the corresponding sectors in the block recess. The block is locked in its seat by a revolution of 60 degrees about its longitudinal axis.

In the assembled block the obturator-spindle recess contains the stem of the obturator with its spring and nut.

The lever handle is mounted between the lever-handle lugs upon the lever-handle pin, which passes through the lugs. On the right lug is a shoulder, which forms a stop, against which a corresponding shoulder on the lever-handle pin abuts, thus limiting the motion of the lever handle.

Digitized by Google

The nose is the front part of the block where it is reduced in diameter to allow of its partial entry into the gas-check seat. This also leaves a recess in which fouling may collect without stopping the working of the block.

The stop groove is a longitudinal groove on the left-hand side, in which the stop on the carrier ring moves, and by which the rear motion of the block is limited. It also has a circular branch, the end of which limits the motion of rotation.

The latch groove is in two parts, one longitudinal in one of the slotted sectors of the block, and the other circular in the rear portion. The front end of the groove terminates in a well, called the locking recess, into which the stem of the latch drops when the block is withdrawn, thus bolting it positively in the carrier ring.

The guide groove is a circular recess in rear of the threaded sectors of the block, in which the guide sectors engage when the block is rotated.

The principal parts of the carrier ring are: The guide sectors, latch cover, latch, latch spring, stop, hinge pin, exterior taper, and lugs.

The guide sectors are three projections from the interior of the ring to fit in the corresponding slotted sectors in the breechblock, and guide and support the latter in its motion through the carrier ring. Ventholes are drilled through these to allow the air to escape in closing the breech.

The latch cover is a separate piece, screwed to the carrier ring by two screws, by which the latch and its spring are protected and retained in their seats. It is assembled from the rear in order that, by the removal of the two screws, the latch and spring may be taken out.

The latch is a locking device for the carrier ring. It fits in a mortise in the same, and is actuated by a spiral spring which pushes it toward the center of the ring. The stem on its inner end slides in the latch groove until it reaches, in closing the breech, the end of the circular branch, and in its rear motion, in opening the breech, the well at the end of the longitudinal branch. In either case the spring thrusts the latch toward the center of the carrier ring, which is unlocked from its seat when the latch reaches these positions. When the breech is closed, the breechblock, of course, holds the carrier ring in place without requiring aid from the latch. When the carrier ring is unlocked in opening the breech, the block is securely bolted into it by the action of this latch, and is firmly supported while being revolved to the side. At every point between the recesses at the ends of the latch groove, the head of the latch projects into the recess in the jacket and fastens the carrier ring in its seat. In the front face of the latch there is a beveled recess into which a hardened stud with a conical point in the rear face of the breech bushing fits. When the carrier ring is swung into its seat, this stud, passing through a hole in the front face of the carrier ring, bears against the beveled surface above mentioned, in the latch, and thus lifts it out of the well at the end of its groove.

The latch spring is a spiral spring compressed between a shoulder on the latch and one on the latch cover; it is designed to thrust the latch pin toward the axis of the carrier ring.

The stop is a small plate on the left-hand side of the carrier ring, assembled from the rear by a stop screw and projecting beyond the bore into the stop groove. It is designed to limit the longitudinal and rotary motions of the block.

The hinge pin is mounted on the left side. It passes through the two lugs on the carrier ring and a lug on the jacket. It is secured in place by two small screws passing horizontally through the carrier-ring lugs into the hinge pin, perpendicular to the axis of the bore.

The exterior taper is the conical surface of contact of the carrier ring in the jacket or breech bushing.

The lugs are ears projecting from the carrier ring in which the hinge pin has its bearing.

Digitized by Google

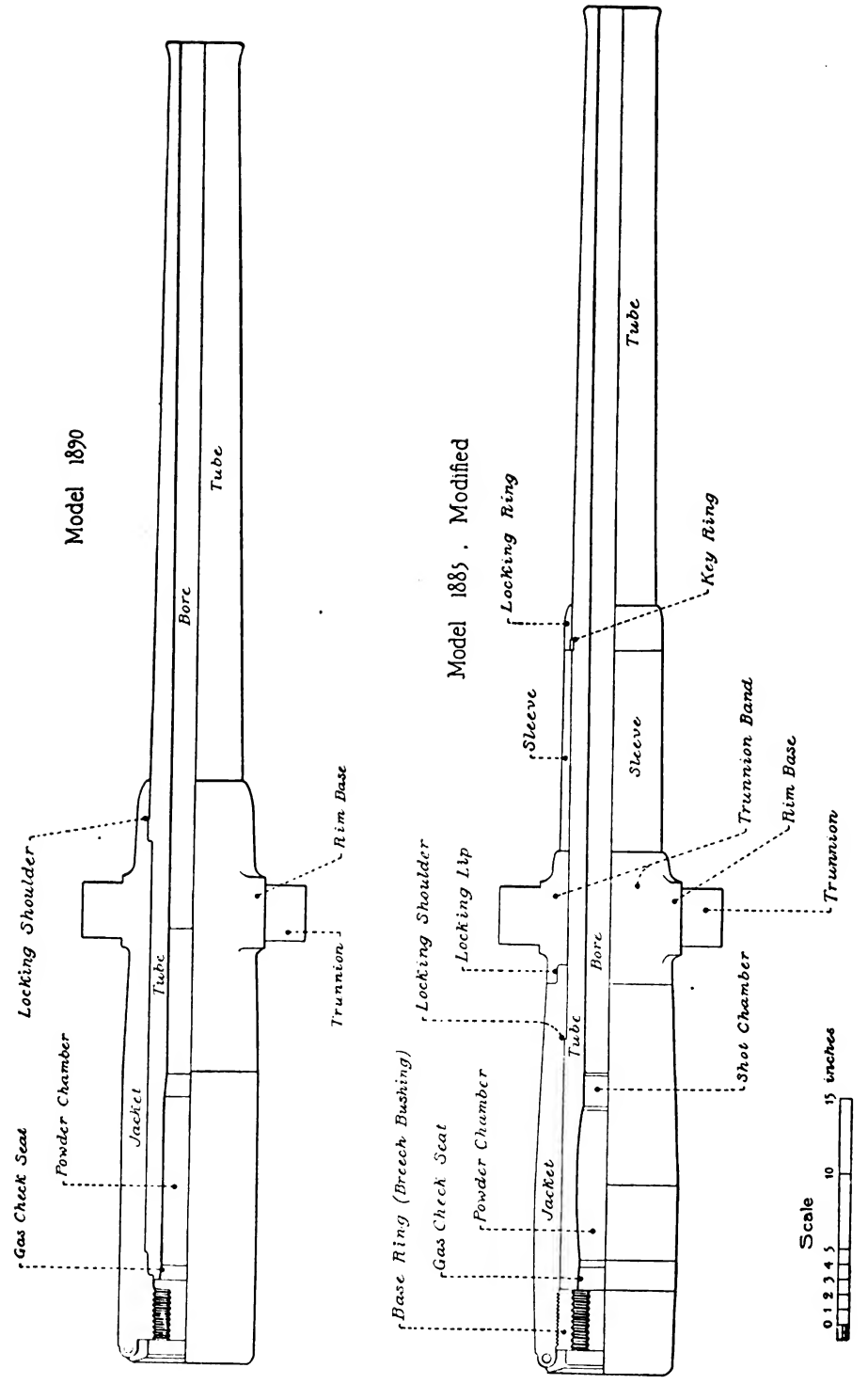

Fig. 30
3·2 inch B.L. Field Rifles. – Steel.

Digitized by Google

Digitized by Google

Fig. 31 – 3·2 inch B.L. Field Rifle:– Steel
MODEL 1890
Breech Mechanism

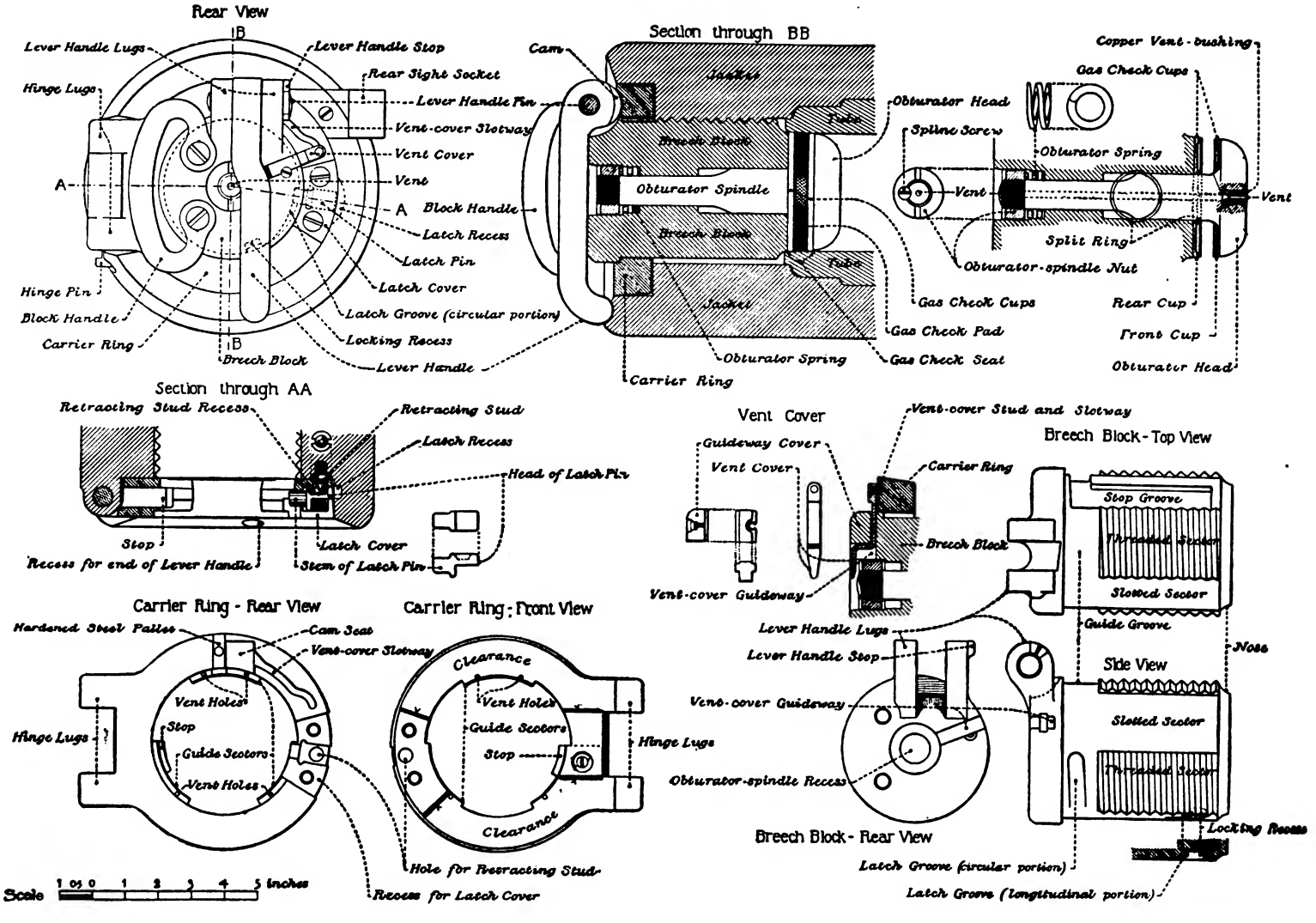

Digitized by Google

Digitized by Google

The obturator is composed of the following parts: The spindle, front cup, rear cup, spring, nut, and spline screw. It transmits to the face of the block, by means of the gas check, the stress of firing resulting from the pressure of the gases upon its mushroom-shaped head, which closes the bottom of the bore. The spindle is mounted in the block in the obturator spindle recess, through which its stem extends. The rear end of the stem terminates in a screw threaded for the spindle nut.

The front cup incloses the gas check pad on the front side, and transmits to it the pressure on the mushroom head. It is of steel and is shaped to fit the rear of the obturator head. It acts as a protecting cover to the front face of the pad.

The pad is a disk of compressed asbestus and tallow, mixed in such proportions as to be semiplastic. It is covered with canvas and protected by the gas-check cups, and in guns of recent model there is a sheet-copper protecting plate on the outer edges of the pad, and a steel split ring on the spindle, back of the rear cup.

During firing, owing to its plastic nature, the pad presses out against the gas check seat and inward against the obturator-spindle stem so as to fill the space and prevent the passage of the gas.

The rear cup is also of steel, and protects the pad on the rear side.

The spring is of steel and surrounds the rear end of the stem, and is compressed between the nut and a shoulder formed by the recess in the face of the block. It is a yielding bearing for the nut when the gun is fired, and also reduces the friction between the nut and its seat. It serves to take up any excess of length of the spindle due to compression of the pad.

The nut is screwed on the end of the stem and holds the spindle in its required position in the block.

The spline screw has its seat partially in the nut and partially in the spindle stem. It prevents the unscrewing of the nut from the stem.

The lever handle is mounted between the lugs of the breechblock, from which it hangs vertically, when the block is closed. Its upper end has, projecting from its front face, a curved surface, which is used as a cam to force back the block and obturator after rotation, when the latter sticks in its seat from firing. A hardened-steel pallet is riveted in the seat of this cam to protect it from wear. In later models this hardened-steel pallet has been lengthened to extend through the guide sectors of the carrier ring and the central air vent through the sector has been omitted. The cam also serves to lock the block in the carrier ring, preventing its rotation during firing. The lever pin passes through an eye in the upper end of the lever. It is the axis of rotation of the lever, with bearings in the breech-block lugs.

The block handle is attached to the base of the block by two screws. It is designed to assist in the movement of the block, especially in entering and withdrawing it.

In guns prior to the model of 1890 the vent is radial. The vent cover is a sliding bolt, mounted under a protecting cover on top of the gun. It is operated by lugs on the lever head, so as to be thrust into a hole in the rear face of the vent-bushing head, when the lever is raised, and to be withdrawn when the lever is depressed after the breech is closed and the block rotated to its locked position.

In the 1890 model the vent is axial. It is situated in the axis of the obturator spindle. A copper bushing in the face of the obturator head is provided for the protection of the vent and to enable repairs to be easily made. The vent cover is an arm mounted in a guide way in the rear face of the block, with a dovetail cover secured by a screw over the guide way. A stud projecting from the upper front face of this arm travels in a slot way in the rear face of the carrier ring. When the block is rotated into its unlocked position, the vent cover hangs vertically over the mouth of the vent, where it remains till, by the rotation of the block

Digitized by Google

into its locked position, it is lifted from over the vent by the outward curvature of the slot way.

The action of the breech mechanism is as follows:

To open the breech: Seize the lever with the left hand, back of the hand to the rear, and raise it as high as possible, releasing the cam from the cam seat. Carry the lever to the left until the block strikes the stop, which brings the threaded sectors of the block opposite the slotted ones in the base ring or jacket. This rotation of the block lifts the latch out of the circular portion of its groove, pushes its outer end into its latch recess, and locks the carrier ring to the jacket. Grasp the handle with the right hand, back down, and draw out the block. When in its extreme rear position, the inner end of the latch drops into the locking recess, locks the block to the carrier ring and unlocks the carrier ring from the jacket. If, after rotating the block, it can not be easily withdrawn, press down the lever with the left hand, and the cam will bear against the face of the carrier ring and start the block to the rear. Swing the block and carrier ring about the hinge pin so as to uncover the prolongation of the bore.

To close and lock the breech: Seize the lever with the left hand, back of the hand to the rear, raise it as high as possible, grasp the handle with the right hand, back down, and swing the block around, keeping the lever extended as in opening, pressing the carrier ring quickly into its seat. When the carrier ring strikes its seat the retracting stud enters the hole in the front face of the ring and acts on the conical surface in the latch so as to lift it out of the locking recess. Push the block forward. In this movement the latch rides up the inclined surface at the front of the longitudinal part of its groove, and is thrust into its latch seat, locking the carrier ring to the jacket. Turn the lever to the right until the cam is opposite its recess in the carrier ring. Then drop the lever till its end rests in its seat in the jacket.

The revolution of the block through its one-sixth of a turn withdraws the latch from the carrier ring, leaving it unlocked so that the latch will not be strained during firing. The latch is an auxiliary part not essential to the firing of the gun, and if broken may be removed by taking off the latch cover. In firing under such circumstances great care must be taken in opening the breech to hold the carrier ring in place by hand until the block is withdrawn, and in closing it to avoid pushing the block home until it is revolved to its extreme position.

Experiments are in progress with a view to applying a rapid-fire breech mechanism to the 3.2-inch rifle and using cartridges having a brass case loaded with smokeless powder. The projectiles will be the same as now used.

The weights, dimensions, etc., of the 3.2-inch rifle are as follows:

Weight	pounds	829
Total length	feet	7.56
Length of bore	calibers	26
Maximum diameter of breech	inches	9.56
Diameter of muzzle	do	5.1
Diameter of trunnions	do	3.8
Length of trunnions	do	2.25
Distance between rimbases	do	9.5
Distance of axis of trunnions from muzzle	do	60.4
Rifling:		
Number of grooves		24
Width of grooves	inches	0.3
Depth of grooves	do	0.05
Width of lands	do	0.1188
Twist of rifling	calibers	1 in 30

Digitized by Google

Powder chamber:		
Diameter	inches	3.8
Length	do	11.508
Capacity	cubic inches	109.7
Total capacity of bore	do	714.7
Powder charge:		
Kind of powder		UF Sphero-hex.
Weight of charge	pounds	8.5
Density of loading		0.8832
Projectile:		
Weight of projectile (filled)	pounds	13.5
Ratio of weight to weight of piece		1/61
Weight of bursting charge	ounces	7.25
Length of projectile	calibers	3
Sectional density $=\frac{W}{d^2}$		1.3183
Travel of projectile (in bore)	calibers	22.5
Muzzle velocity	foot-seconds	1,685
Pressure per square inch in powder chamber	pounds	35,000
Muzzle energy	foot-tons	265.7
Penetration in steel at muzzle	inches	3.8
Forgings:		
Total weight	pounds	1,397
Weight of tube	do	622
Weight of jacket	do	426

RANGE TABLE FOR 3.2-INCH B. L. RIFLE (STEEL), WITH COMMON SHELL.

Shell, filled and fused	pounds	13.5
Bursting charge, mortar powder	ounces	7
Length of shell	inches	9.54
Powder charge:		
I. K. powder	pounds	3.75
Sphero-hex. powder	do	3.50
Muzzle velocity	foot-seconds	1,685

This range table is based upon firings made at the Sandy Hook Proving Ground—6272,'93.

The coefficient of reduction, derived from measured velocities at 202 and 3,000 feet, has the value,

$$c = 0.93.$$

The ballistic coefficient, estimated from the preceding and for an atmosphere two-thirds saturated with moisture, has the value,

$$C = 1.4224.$$

The angle of jump varies from about 20 minutes at 1° to 30 minutes at 10° elevation. Its value is not included in the column of "Elevation."

Each division of the horizontal scale of the 3.2-inch breech sights now in use equals 1-345th part of the distance between sights, thus giving a correction of about 0.9 of a foot for deflection for each 100 yards of the range. This variation is tabulated under the heading, "Deflection for 1 division of the horizontal scale."

The rear sights now being issued for 3.2-inch field guns have range scales in *yards* for shrapnel and shell engraved upon the sight in addition to the degree scale.

The scale of yards for shrapnel, on the rear face of the sight (left side) is arranged with diagonal lines to be read in the same manner as the degree scale. Each diagonal embraces

Digitized by Google

250 yards of range, and there are five divisions on the upper edge of the slide, by which this space is subdivided, so that intervals of 50 yards in range are read directly from the scale.

The scale of yards for shell, on the front face of the sight, is marked for each 100 yards of range and is read from an index line on the slide.

Range.	Elevation.		Variations.		Time of Flight.	Fall.			Terminal Velocity.
			Range, 1 minute elevation.	Deflection, 1 division hor. scale.		Angle.		Inclination 1 yard in—	
Yards.	*Deg.*	*Min.*	*Yards.*	*Feet.*	*Seconds.*	*Deg.*	*Min.*	*Yards.*	*Foot-seconds.*
500	0	12	14	4.4	0.96	0	36	95	1,450
600	0	19	13	5.2	1.17	0	45	76	1,408
700	0	26	12	6.1	1.39	0	54	64	1,366
800	0	34	12	7	1.61	1	5	53	1,326
900	0	42	12	7.8	1.84	1	16	45	1,287
1,000	0	51	11	8.7	2.07	1	28	39	1,250
1,100	1	—	11	9.6	2.32	1	41	34	1,215
1,200	1	9	11	10.4	2.57	1	55	30	1,182
1,300	1	18	10	11.3	2.82	2	9	27	1,151
1,400	1	28	10	12.2	3.09	2	25	24	1,121
1,500	1	38	10	13	3.36	2	41	21	1,094
1,600	1	49	10	13.9	3.64	2	59	19	1,070
1,700	2	—	9	14.8	3.92	3	17	17	1,048
1,800	2	11	9	15.7	4.21	3	36	16	1,029
1,900	2	23	9	16.5	4.50	3	56	15	1,011
2,000	2	35	8	17.4	4.80	4	17	13	994
2,100	2	48	8	18.3	5.10	4	38	12	979
2,200	3	2	8	19.1	5.41	5	—	11	964
2,300	3	16	7	20	5.72	5	23	11	949
2,400	3	30	7	20.9	6.04	5	47	10	935
2,500	3	44	7	21.7	6.36	6	11	9	923
2,600	3	58	7	22.6	6.69	6	37	9	912
2,700	4	12	7	23.5	7.02	7	3	8	901
2,800	4	27	7	24.4	7.35	7	30	8	891
2,900	4	42	7	25.2	7.68	7	58	7	881
3,000	4	58	6	26.1	8.01	8	27	7	871
3,100	5	14	6	27	8.35	8	56	6	861
3,200	5	30	6	27.8	8.69	9	26	6	851
3,300	5	46	6	28.7	9.03	9	57	6	841
3,400	6	3	6	29.6	9.37	10	29	5	832
3,500	6	21	6	30.5	9.71	11	1	5	823
3,600	6	39	6	31.3	10.06	11	34	5	814
3,700	6	57	6	32.2	10.41	12	8	5	806
3,800	7	15	5	33.1	10.77	12	43	4	798
3,900	7	33	5	33.9	11.13	13	18	4	790
4,000	7	52	5	34.8	11.50	13	54	4	782
4,100	8	11	5	35.7	11.87	14	31	4	774
4,200	8	30	5	36.5	12.25	15	9	4	766
4,300	8	50	5	37.4	12.63	15	47	4	758
4,400	9	10	5	38.3	13.02	16	26	3	750
4,500	9	31	5	39.2	13.42	17	5	3	743

Digitized by Google

RANGE TABLE FOR 3.2-INCH B. L. RIFLE (STEEL), WITH SHRAPNEL.

Shrapnel, filled and fused	pounds	13.5
Bursting charge, rifle powder	ounces	8
Length of shrapnel	inches	9.5
Powder charge:		
IK powder	pounds	3.75
Sphero-hex. powder	do	3.50
Muzzle velocity	foot-seconds	1,685

This range table is based upon firings made at the Sandy Hook Proving Ground—6272, '93.

The coefficient of reduction, derived from measured velocities at 202 and 3,000 feet has the value,

$$c = 1.03.$$

The ballistic coefficient, estimated from the preceding and for an atmosphere two-thirds saturated with moisture, has the value,

$$C = 1.2843.$$

The angle of jump varies from about 20 minutes at 1° to 30 minutes at 10° elevation. Its value is not included in the column of "Elevation."

Each division of the horizontal scale of the 3.2-inch breech sights now in use equals 1-345th part of the distance between sights, thus giving a correction of about 0.9 of a foot for deflection for each 100 yards of the range. This variation is tabulated under the heading, "Deflection for 1 division of the horizontal scale."

The rear sights now being issued for 3.2-inch field guns have range scales in *yards* for shrapnel and shell engraved upon the sight in addition to the degree scale.

The scale of yards for shrapnel, on the rear face of the sight (left side) is arranged with diagonal lines to be read in the same manner as the degree scale. Each diagonal embraces 250 yards of range, and there are five divisions on the upper edge of the slide by which this space is subdivided, so that intervals of 50 yards in range are read directly from the scale.

The scale of yards for shell, on the front face of the sight, is marked for each 100 yards and is read from an index line on the slide.

The tabular numbers of the column "Differs from shell" indicate the necessary *increase* of elevation in passing from shell to shrapnel firing, to attain the same range.

FUZE SCALE.

The fuze scale is based upon the time of burning in flight. Each *unit* (representing one second) is divided into *six* parts. The "units" are numbered and marked by through holes in the fuze cover.

The tabular numbers of the column "Divisions" indicate the point of the time train to be cut for each range. These numbers correspond to a time of flight which is generally less than the tabulated time of flight by an amount required to cause the shrapnel to burst at a point *within a distance of 75 yards short* of the target.

The *bursting interval* may be regulated by lengthening or shortening the cut of the fuze scale—using the tabular numbers of the column "Variation in range, 1 subdivision."

A common rule for *height of burst* is that the height above ground should not exceed 1 foot for each 100 yards of range (5 feet at 500, 10 feet at 1,000, 20 feet at 2,000 yards, etc.), or should, for every range, be below a prolonged line inclined 10 minutes above the line joining gun and foot of target.

An observed height of burst may be regulated by the tabular numbers of the column "Change in height of burst for 1 minute elevation."

Digitized by Google

Range.	Elevation.			Variations.		Time of Flight.	Fuze Scale.			Change in height of burst, 1 minute elevation.	Fall.			Terminal Velocity.
	Angle.		Differs from shell.	Range, 1 minute elevation.	Deflection, 1 division hor. scale.		Divisions.		Variation in range, 1 subdiv.		Angle.		Inclination, 1 yard in—	
Yards.	*Deg.*	*Min.*	*Minutes.*	*Yards.*	*Feet.*	*Seconds.*	*Units.*	*Sixths.*	*Yards.*	*Feet.*	*Deg.*	*Min.*	*Yards.*	*f. s.*
500	0	13	1	14	4.4	.97	0	4	80	0.4	0	37	93	1,426
600	0	20	1	13	5.2	1.18	1	0	78		0	46	75	1,380
700	0	27	1	12	6.1	1.40	1	1	75		0	56	61	1,335
800	0	35	1	12	7.0	1.63	1	3	73		1	6	52	1,292
900	0	43	1	12	7.8	1.87	1	4	71		1	19	44	1,251
1,000	0	52	1	11	8.7	2.11	2	0	67	0.9	1	32	37	1,212
1,100	1	2	2	11	9.6	2.36	2	1	67		1	45	33	1,176
1,200	1	12	3	11	10.4	2.62	2	3	67		2	1	28.5	1,142
1,300	1	22	3	10	11.3	2.89	2	5	62		2	17	25	1,110
1,400	1	33	5	10	12.2	3.16	3	0	62		2	34	22.5	1,082
1,500	1	44	6	9	13.0	3.44	3	2	58	1.3	2	52	20	1,056
1,600	1	55	6	9	13.9	3.73	3	4	58		3	11	18	1,034
1,700	2	7	7	9	14.8	4.02	3	5	58		3	30	16.5	1,014
1,800	2	19	8	8	15.7	4.32	4	1	55		3	50	15	995
1,900	2	32	9	8	16.5	4.62	4	3	55		4	12	13.5	978
2,000	2	45	10	7	17.4	4.93	4	5	52	1.7	4	34	12.5	962
2,100	2	59	11	7	18.3	5.25	5	1	52		4	57	11.5	946
2,200	3	13	11	7	19.1	5.57	5	2	52		5	21	10.5	920
2,300	3	28	12	7	20.0	5.90	5	4	50		5	45	10	915
2,400	3	43	13	7	20.9	6.23	6	0	50		6	11	9	901
2,500	3	58	14	6	21.7	6.56	6	2	49	2.2	6	38	8.5	887
2,600	4	14	16	6	22.6	6.90	6	4	49		7	5	8	874
2,700	4	29	17	6	23.5	7.24	7	0	49		7	34	7.5	862
2,800	4	44	17	6	24.4	7.58	7	2	49		8	4	7	850
2,900	5	1	19	6	25.2	7.92	7	4	49		8	35	6.5	839
3,000	5	18	20	6	26.1	8.26	8	1	48	2.6	9	7	6	829
3,100	5	35	21	6	27.0	8.61	8	3	48		9	39	6	819
3,200	5	52	22	6	27.8	8.96	8	5	48		10	12	5.5	810
3,300	6	9	23	5	28.7	9.32	9	1	47		10	46	5.5	801
3,400	6	28	25	5	29.6	9.68	9	3	47		11	21	5	792
3,500	6	47	26	5	30.5	10.04	9	5	45	3.0	11	56	4.5	783
3,600	7	6	27	5	31.3	10.41	10	1	45		12	32	4.5	775
3,700	7	25	28	5	32.2	10.78	10	4	45		13	9	4.5	767
3,800	7	45	30	5	33.1	11.16	11	0	44		13	48	4	759
3,900	8	5	32	5	33.9	11.54	11	2	44		14	28	4	751
4,000	8	25	33	5	34.8	11.92	11	5	44	3.5	15	8	3.5	744
4,100	8	44	33	5	35.7	12.30	12	1	44		15	49	3.5	737
4,200	9	3	33	5	36.5	12.68	12	3	44		16	31	3.5	730
4,300	9	24	34	5	37.4	13.06	12	5	43		17	14	3	723
4,400	9	44	34	5	38.3	13.45	13	2	43		17	58	3	717
4,500	10	5	34	5	39.2	13.84	13	4	43	3.9	18	43	3	711

Example, illustrated by tabular numbers: Suppose the gun to be ranged to strike at the foot of the target at 2,000 yards—

The time of flight for 2,000 yards is	seconds	4.93
The prescribed cut for 2,000 yards is $4\frac{5}{6}$ =	do	4.83
The bursting interval is then the difference	second	0.1

Digitized by Google

The variation in range for one subdivision (½ of a second), for 2,000 yards range, is 52 yards; for $\frac{1}{10}$ of a second it is (6 x 52)÷10, or 31.2 yards. That is, the shrapnel will burst 31.2 yards short of the target. The inclination of fall is 1 yard in 12.5 at 2,000 yards. Therefore the height of the burst will be 31.2 ÷ 12.5, or 2.49 yards, equal to 7.47 feet. If it were desired to increase this height to about 15 feet, for example, it would be necessary to give 4 minutes of arc more elevation, since 1 minute at this range corresponds to a change in height of burst of 1.7 feet.

CARRIAGE FOR 3.2-INCH B. L. RIFLE.

The 3.2-inch gun is mounted on a carriage entirely of metal, excepting the spokes of the wheels. The principal parts are the axle, axle plates, wheels, flasks, brakes, and elevating apparatus.

In the carriage now in service the axle is hollow, 3 inches in diameter, of circular cross section, with the wall ½ inch thick. For the distance of 21⅛ inches from either end it is reenforced by a second tubing ½ inch thick (see fig. 3).

The spindles have a set so that the bottom line is parallel to the axis of the axle.

The shoulder washers are forged upon the axle, and have the brake eye straps shrunk upon them.

In future constructions solid axles, made of steel of greater elastic limit and ultimate strength, are to be substituted for the hollow form.

In the old carriages the linchpin is a ⅝-inch eye pin, but in the later models it has been enlarged, and it now has a rectangular cross section ⅝ by 1¼ inches, rounded at the corners. It has a hook catch mounted on a ¼-inch rivet through the eye, which is designed to be passed around and under the spindle after the linchpin is in its seat. Between the linchpin and the end of the nave is a ⅜-inch metal washer backed by a leather washer.

The axle plates, one above and one below the axle, to which they are fitted, are of ⅜-inch steel plates, riveted together by ⅝-inch rivets. These plates extend 13½ inches in rear of the axis of the axle and 5½ inches to the front.

The wheels are of the Archibald pattern, 57¾ inches in diameter (see fig. 4).

The flasks are each built-up I beams, made of two thicknesses of .2-inch rolled steel plate, with strengthening flanges on the edges, nearly circular in cross section, forming the top and bottom of the I. This circular flange is formed by a semicircular corrugation in each. The outer-plate flange extends beyond the circle, and tangent thereto on the bottom; also on the top as far forward as the front of the trail box. These plates are fastened together by ⅝-inch bolts and rivets.

The two flasks are united by the transoms, the axle plates (to which they are bolted), and the lunette plate. The lunette, which combines both trail and lunette plates, is a single forging and is fastened to the flasks by ten ⅝-inch rivets and four ⅝-inch bolts, the latter passing through the handspike attachments as well as the lunette and flask plates.

The handspike socket is attached to the lunette by the front and rear handspike-attachment plates, which are two ear plates, each attached to the trail plate by three ⅝-inch bolts, the two outer ones passing through the ear plates, trail plate, and upper flanges of the outer flask plates, and the middle bolt from below through the trail plate and attachment plates.

The front attachment plate has passing through its ears a pin secured by a split key. The rear attachment plate has through its ears a $\frac{9}{10}$-inch square pin, riveted.

The trail handspike is of wood, circular in cross section, split longitudinally, with a .1-inch steel plate inserted between the wood sections. These parts are assembled by six rivets perpendicular to this plate, two of which pass through assembling bands, three have washers under their heads, and one passes through a metal ferrule on the small end of the

Digitized by Google

handspike. The large end of the handspike fits into the socket, by which it is attached to the trail. The front end of this socket terminates in a web, in which there is an elongated eye, through which the front attachment pin passes. From the rear underside of the socket extends a second web, terminating in a square hook, which engages under the rear attachment pin The front eyehole is sufficiently elongated to permit of the hook being disengaged from the pin by drawing the handspike to the rear, and allows of its being revolved to the front, resting, when not in use, upon the top of the trail, where it is secured by the handspike clasp, mounted on the elevating-screw crank.

It is probable that a handspike made of sheet steel will be substituted very soon for the one above described.

The trail handles, made of ⅝-inch iron, are each riveted to the flasks by two ⅝-inch rivets.

There are two wheel guards, one bolted on each flask with two ⅝-inch bolts.

There are five transoms between the flasks—one rear transom, two trail-box transoms (front and rear), one middle transom, and one front transom.

The rear transom, of .2-inch steel plate, is about 23¼ inches from the rear end of the lunette plate. It is perpendicular to the bottom line of the flasks, and riveted to each of them by two ⅝-inch rivets passing through side flanges bent to the rear.

The rear trail-box transom, of .2-inch steel plate, is 3 feet from the end of the lunette, perpendicular to the bottom line of the flasks. It is riveted to each of them by two ⅝-inch bolts through side flanges bent to the front. A top flange bent to the front offers a rear support for the trail box lid. A steel plate, 12⅜ inches long, .1 of an inch thick, fitted to the flasks between the rear transom and the rear trail-box transom, serves as a bottom to the sponge-bucket compartment.

The front trail-box transom, of ¼-inch steel, is 30 inches in rear of the axle. It is perpendicular to the bottom line of the flasks and is secured to each of them by two ⅝-inch rivets through side flanges bent to the rear. The bottom plate is of .1-inch steel plate $16\frac{3}{16}$ inches long. It rests on the bottom flanges of the outer flask plates. The lid of the trail box is of .1-inch steel hinged transversely, and is secured by a hasp fastened to the lid with a strap, passing over a turn-buckle stud on the rear trail-box transom. Its hinge plate is riveted to the top flange of the front trail-box transom.

The middle transom is of ¼-inch steel plate, perpendicular to the bottom line of the flasks. It is secured to each of them by two ⅝-inch bolts passing through flanges bent to the rear, with nuts on the inside. There is also a bottom flange bent to the rear through which the eyebolts for the elevating apparatus pass. There are two holes, 2 inches in diameter, through this transom for the short sponge and rammer staves.

The front transom is of .2-inch steel plate parallel to the bottom line of the flasks. It is in two levels, the lower level being bolted to the axle plate in front of the axle and the upper one passing over the axle. It is bolted to the axle plates by four ⅝-inch bolts, two of which pass through the short sponge and rammer attachment. It is also bolted through two upturned flanges to each of the flasks by two ⅝-inch bolts passing through the two flask plates, the front transom, and the axle-seat plate.

Each of the trunnion pieces is of forged steel 2⅛ inches thick assembled between the outer and inner flask plates by six ½-inch through rivets. They are shaped to the trunnions, which are retained in place by the cap-squares. The latter fit over the front and rear eyebolts, to which they are held by two keys secured by rings to the ends of a double key chain, running from a central ring welded in an eye pin, screwed in the outer face of the cap-square at its central point.

The rear arm of the cap-square is 1½ inches above the front arm. Below the trunnion

Digitized by Google

Fig. 32 – 3·2 inch B.L. Field Rifle. – Steel Field Carriage

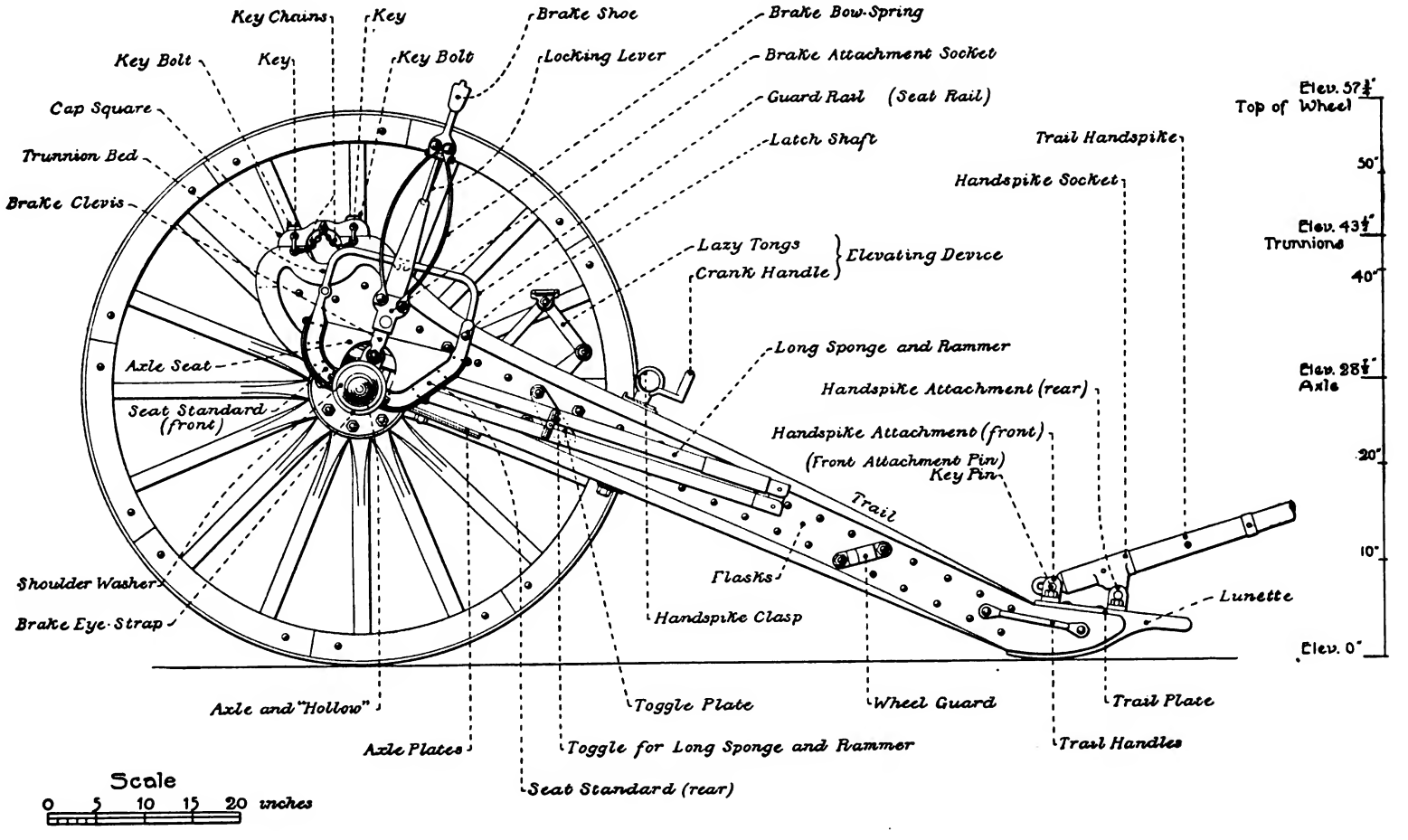

Digitized by Google

Digitized by Google

beds, and a little in front of the axis of the trunnions, is a ¾-inch assembling transom bolt connecting the flasks.

A piece of piping mounted upon this bolt is fitted between the flasks as a separator.

On each side of the flasks, between them and the wheels, is an axle seat for a cannoneer, made of .10-inch steel plate. A flange bent downward on the inner end is bolted to the flasks by the front-transom flask bolts.

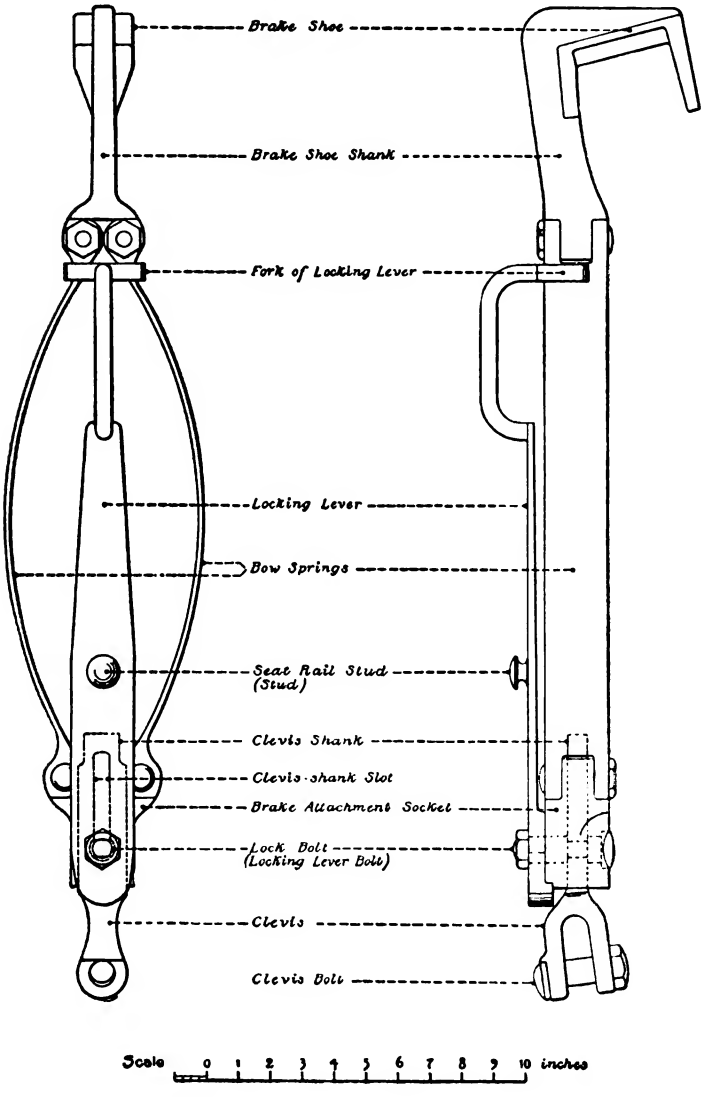

Fig. 33. Brake for 3.2-inch Breech-loading Rifle Carriage.

A flange bent downwards at the outer end is slotted to fix the axle plates, front and rear, and is stiffened by the seat standards and reenforces, which are plates riveted to its outer edges, terminating in standards for the guard rail.

The latter is a ⅝-inch round bar bent to the form of a seat arm. Its front end terminates in an eye, which fits between ears on the end of the front standard. It is secured in this seat by the seat rail-hinge pin, whose nut is riveted on. The guard rail may be turned in a vertical plane about this rivet as an axis. Its other end is slotted so as to pass over the squared section of the latch shaft, on the inner end of which is riveted the seat-rail latch thumb piece. When the latch shaft is turned by the thumb piece in its circular seat so that its rounded section is opposite the slot, the rail is secured in position.

There are two brakes, one for each wheel.

The brake consists of two bow springs with their concave sides toward each other, assembled at one end to the brake-attachment socket by two ⅝-inch bolts passing through the ears of the socket. The other ends of the spring are bolted by two ⅝-inch bolts to the brake shoe, which is designed to fit over the tire. The socket is bolted to the shank end of the clevis by the locking-lever bolt; the squared section of the latter works in an elongated slot in the shank of the clevis. The U-end of the clevis fits over the eye lug on the brake eye strap, and is bolted to it by a $1\frac{3}{8}$-inch clevis bolt.

There is also mounted on the locking-lever bolt of the attachment socket the inner end of a locking lever. The other end, terminating in a fork, passes over the bow springs near

Digitized by Google

their union with the brake shoe. This lever is used to turn the locking bolt so that when its squared section is brought opposite the slot in the clevis shank the brake may be elongated nearly the length of the slot.

When the locking lever is parallel to the axis of the brake, and its fork is over the bow springs, the bolt is held in the round hole at the clevis end of the slot. The brake then has its shortest length, and is in condition to be used either as a recoil or traveling brake. By putting it over the wheel to the rear it may also be used as a mud scraper on the march. When so used, it should be secured by a cord or wire, fastened to the brake shoe at one end and to the standard below the axle seat at the other, to prevent its being carried over the wheel to the front.

When the lever is turned up perpendicular to the axis of the brake the squared section of the bolt is then in the clevis-shank slot, and the brake, if on the wheel in use as a road brake, will be thrown by the tension on the springs to the front, free from the wheel, and by continuing the motion of the lever to the rear (the cannoneer on the axle seat operating it), the brake may be brought up vertical, dropped down again on the clevis, and the locking lever brought forward and secured in its position parallel to the axis of the brake.

The stud, riveted on the back of the lever near its lower end, serves to hold the brake vertical when not in use; this stud at such time is held in a recess on the underside of the guard rail.

The elevating device consists of a lazy-tongs system of levers actuated by an elevating screw operated by a crank. It is located between the flasks, in front of the trail box and in rear of the middle transom.

The double lazy-tongs system is formed of two equal and parallel ones, like parts of each having bearings at the ends of the same assembling bolts. Each system is composed of two similar oblique equilateral parallelograms having one common vertex and having two corresponding sides in prolongation of each other. The union of the two parallelograms is made by a ⅞-inch central bolt journaled in two independent side levers outside of the lazy tongs and parallel thereto.

The forward ends of these side levers are mounted on the side-lever journal rod, which has its end bearings in the two eyebolts passing through the bottom flanges of the middle transom and flasks and through the axle plates. The rear ends of the side levers are supported by journals projecting from the aluminium-bronze crosshead elevating nut, which travels on the elevating screw. These journals rest in two crosshead slides working in grooves on the inner side of the side levers. A ⅞-inch transom bolt in front of this nut prevents the side levers from spreading.

The elevating screw is supported top and bottom by two brackets bolted by ⅝-inch bolts on the front side of the front trail-box transom, midway between the flasks. A nut is screwed on the lower end of the elevating screw below the lower bracket, and is secured by a stay pin.

The crank is mounted on the upper end of the elevating screw. It has a 3½-inch lever arm terminating in a handle.

The clasp for securing the handspike is mounted on the crank. It serves the double purpose of retaining the handspike and of preventing the elevating screw from rotating when on the march.

The upper parallelogram of the lazy tongs has its sides twice the length of those of the lower. The sides meeting in the common vertex are prolongations of each other and constituted by the same bar. The remaining sides of the parallelograms terminate at the gun and at the fixed point of the system A, at the bottom of the trail (see fig. 34).

At the fixed point the arms of the parallelogram are journaled on a rod whose ends are supported in the lower journal box on brackets bolted to the inner sides of the flasks.

Digitized by Google

The union of the ends of the long arms, constituting the upper vertex of the larger parallelogram, is made by the upper assembling bolt, which also supports the breech-strap eye washers. A leather strap through these washers passes over the gun and holds it in contact with its seat on the upper assembling bolt.

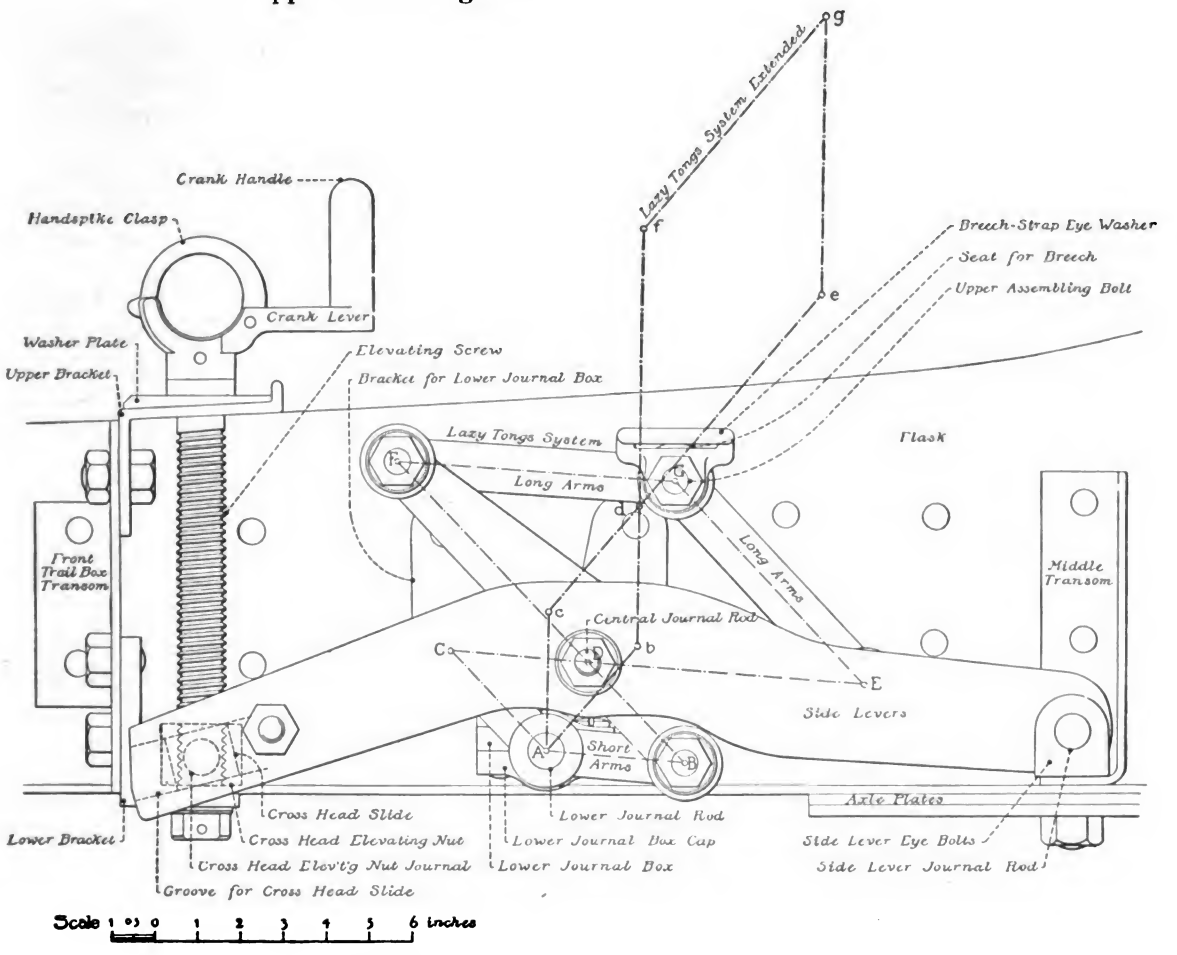

Fig. 34. Elevating Device for 3.2-inch Rifle Carriage.

The action of the system is as follows: The turning of the crank lever on the elevating screw rotates the screw, causing a vertical movement of the crosshead nut, thus raising or lowering the power ends of the side levers. This motion lifts or lowers the central journal rod and elongates or contracts the diagonals of the parallelograms. As the upper parallelogram has its sides twice that of the lower, there is a like change in the diagonals, and the point *G* has double the motion of the point *D*.

As the point of contact of the upper assembling bolt with the underside of the gun has a slight longitudinal motion, the breech strap must not be drawn tight except in traveling.

The following instruments are mounted upon the carriage: The trail handspike, two combined short sponges and rammers, and the jointed sponge and rammer.

The trail handspike is mounted on the lunette plate in its socket, as already described.

The maneuvering handspike is of wood, made in one piece, with a ⅝-inch handspike ring 6½ inches from its upper end. It is carried on the caisson.

Digitized by Google

The combined short sponge and rammer, for use at the breech of the gun, has a wooden staff 1½ inches in diameter. On one end is a wooden rammer head 2 inches in diameter, protected by a brass rammer head, secured by a wood screw; it is countersunk so as not to strike the brass plug or fuze. At the other is a sponge nailed upon a wooden head 2.75 inches in diameter.

The two combined sponges and rammers are habitually carried between the flasks, and are supported by the middle transom and by an attachment plate bolted on the axle plates in front of the axle. They are retained in place by clasps fitting over the grooved ferrules, which are secured by latches similar to the one used for the seat guard rail.

For purposes of drill or action, an attachment has been added so that the combined sponge and rammer need not be put in its traveling position between the flasks, but quickly hooked on the seat guard rail. To accomplish this there are two hooks, one fixed and the other movable.

The hook near the rammer head is movable. It is composed of two principal parts—a socket ferrule riveted to the staff and a sliding sleeve with a hook on one side, which has a bolt working in the socket so as to compress a spiral spring, having one end bearing at the bottom of the socket and the other on a shoulder on the bolt body. The fixed hook is near the sponge end; it projects from a sleeve which is riveted on the staff with two rivets. A grooved ferrule is riveted on the staff below the fixed hook.

The jointed sponge and rammer consists of a wooden staff hinged near its middle point, with a sponge at one end and a wooden rammer head, protected by a copper band, at the other. A metal sleeve slips over the hinge joint when the rammer staff is opened out.

There are two other sleeves riveted to the staff, designed to protect the same when mounted under the toggle on the outside of the left flask.

The toggle is riveted on the end of a bar, which is mounted by a staple passing through an eye at its upper end, and riveted to the toggle plate. The latter is fastened to the flask by two ⅝-inch bolts.

In traveling, the toggle stud passes between the two sections of the staff doubled together and is turned so as to key them in place.

The sponge branch of the staff is uppermost, with the sponge over the axle and the rammer head in rear of it, resting on the axle plates.

Smaller implements are carried in the trail box.

LIMBER FOR 3.2-INCH RIFLE.

The gun-carriage limber is of metal, excepting the ammunition chests, the pole, the footboards, and the spokes and fellies of the wheels.

The axle is of wrought tubular steel, circular cross section, 3 inches in diameter, ⅜-inch wall. Upon it are shrunk three cast-steel coached beds, as they are called, of square exterior section, 3.375 inches on the side, with chamfered corners. One of these, 6 inches long, is at the middle of the axle, and one, 9⅜ inches long, is at each end, inside of the wheel spindles, the outer part forming the shoulder washers. The set of the axle is such as to make the botton element of the spindle parallel to the axis of the axle.

The coached beds serve as seats for the superposed frame of the limber, which rests upon them secured by three under straps.

The wheels and the linch washers and pins are of the same dimensions as those on the gun carriage.

The side rails, formerly called the hounds, are of angle irons, 2.5-inch face, with the exterior of the vertical face towards the wheels. That portion of this face which passes over the axle, which it partially encompasses, is cut out to fit it. A blocking piece is used on top

Digitized by Google

Fig. 35 – 3·2 inch B.L.Field Rifle.- Steel Limber

SIDE ELEVATION

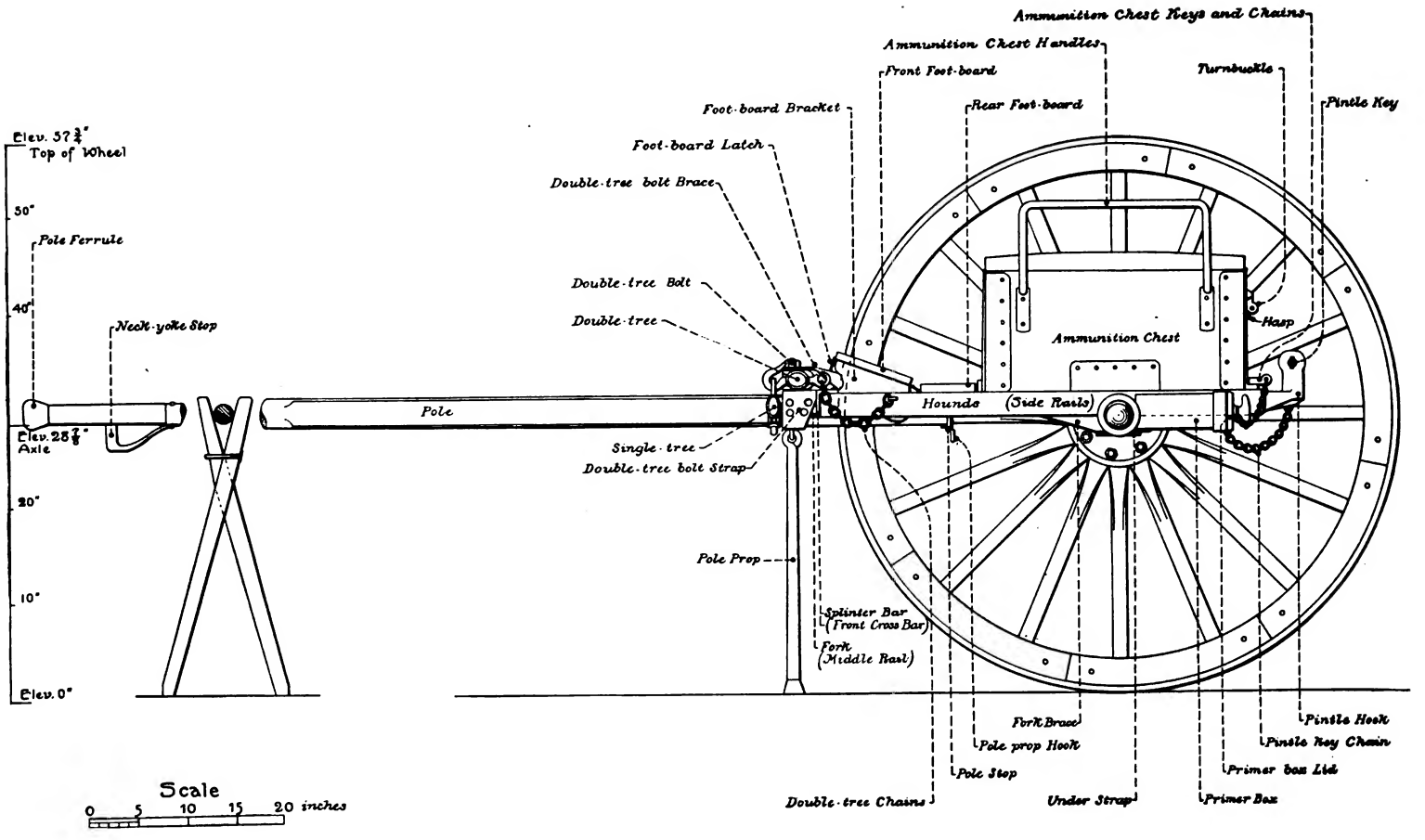

Digitized by Google

Digitized by Google

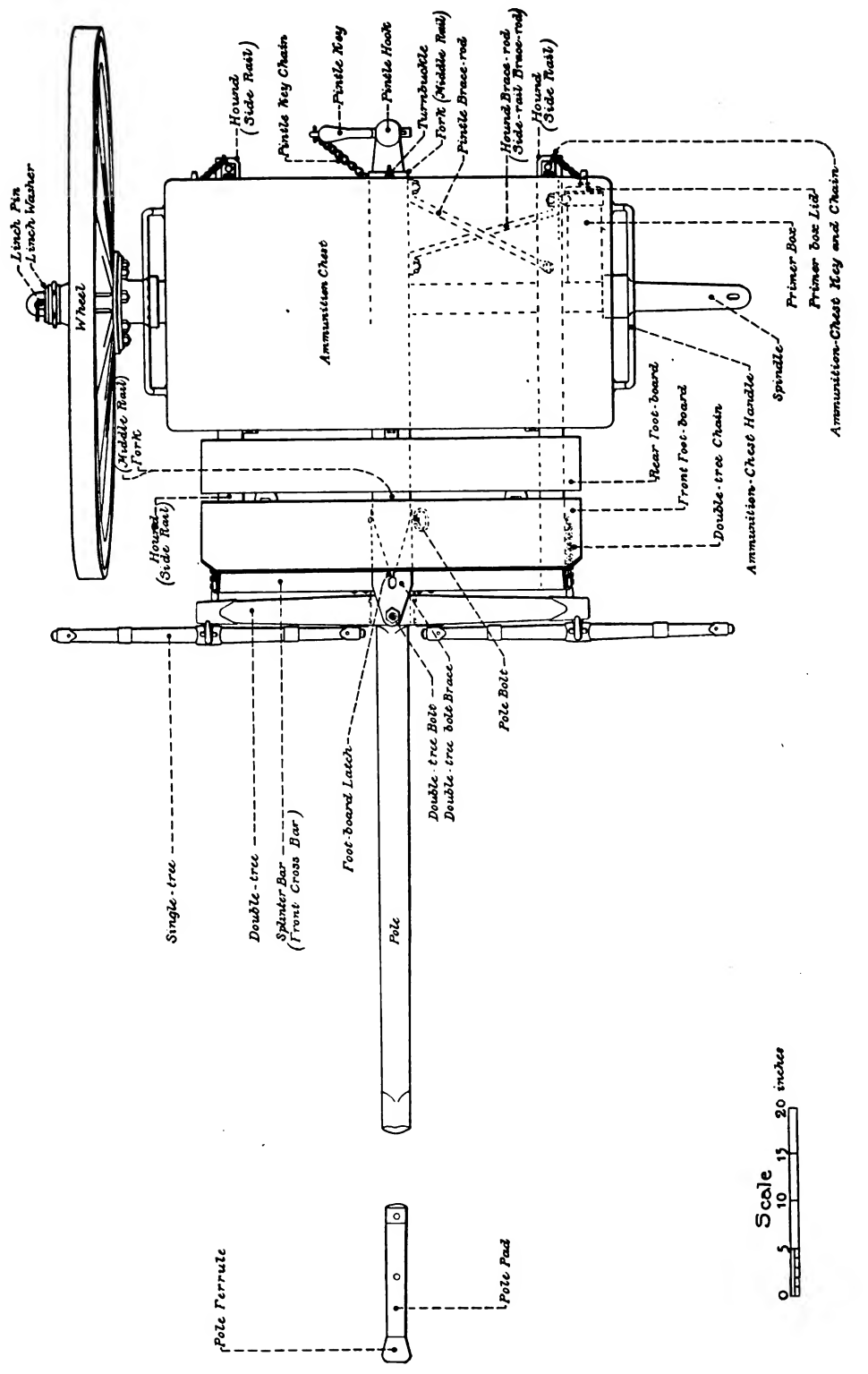

Fig. 36 – 3·2 inch B.L. Field Rifle. – Steel Limber
PLAN

Digitized by Google

Digitized by Google

of the axle between it and the upper flange, that the whole vertical flange need not be cut away. The side-rail under strap is bolted through the upper flange by ⅝-inch bolts, one on each side of the axle. A tubular iron box with bronze screw cover, for primers and extra gas checks, is bolted to the rear side of the axle and outside of each of the side rails by two ⅝-inch bolts. Doubletree chains are secured to the outside of each side rail by a staple riveted therein near its front end.

The middle rail, corresponding to the fork of the old carriage, consists of two similar angle irons with edges of the top flanges in juxtaposition. The vertical flanges are cut out to fit about the axle and have blocking between it and the under surface of the top flanges. A strap about the front end of the middle rail forms a clasp for the pole and also a support for the doubletree. The doubletree bolt passes vertically through this strap, upon which the steel doubletree is mounted. The rear end of the pole abuts against the pole stop, which is riveted to the side faces of the middle rail.

The pole is secured in its seat by the pole bolt, which passes through it and the sides of the middle rail. This bolt is locked by turning it so that the shoulders of the slots in the two ribs projecting from the sides of the bolt prevent motion endwise.

Formerly there was an oval ring through an eye in the head of the bolt, but this has been changed into a handle. The doubletree-bolt brace passes over the doubletree bolt and is secured upon it by a nut. Its side flanges extend down each side of the middle rail and are secured by the pole bolt, which passes through them. There is, between the sides of the middle rail immediately in front of the axle, a middle-rail brace riveted to the sides of the middle rail by eight rivets. Two diagonal braces in rear of the axle on each side of the middle rail are bolted to the side and middle rails, connecting them and stiffening the frame. Those assembled to the side rails by the ringbolts of the primer boxes are called side-rail brace rods; the other two pintle-brace rods. The pintle-hook body is mounted between the sides of the middle rail, and extends from the rear face of the axle beyond the rear end of the middle rail. It is held in position by the two pintle bolts assembling the diagonal braces to the middle rail. The pintle hook at the rear end of the body has an eye through its knob, through which the pintle key may be passed to secure the lunette of the gun carriage. This key is at the end of the pintle-key chain, by which it is attached to the middle rail by the rear pintle bolt.

The front crossbar, also a 2.5-inch angle iron, extends across the front end of the frame. It is riveted to the side rails at their ends through the front and top flanges, and to the middle rail immediately behind the doubletree-bolt strap, through the top flange. The front flange is cut to admit the pole to its seat.

There are two wooden footboards. The rear one is riveted to the side and middle rails immediately in front of the ammunition chest. The front one is hinged to the rear one by two strap hinges. The three footboard brackets are riveted to the underside of the front footboard, by which the latter is given an inclination that it may better support the feet. These brackets rest upon the side and middle rails. The front footboard is secured by a hinged latch with its hinge strap attached to its front edge. This latch engages under the doubletree brake, in a seat slotted for the purpose.

Under the footboards, between the middle and side rails and riveted thereto, are two cast-bronze footboard compartments. In one are carried the tool box, oil can, and axle-grease can, with spatula, and in the other four folding canvas watering buckets, the rear sight, and small implements. Access is had to these compartments by turning back the front footboard.

The pole is of wood and has a leather pad on the forward end and a neck-yoke stop on its underside. At the rear end of the neck-yoke stop is an eye rivet, which forms a hinge

Digitized by Google

for a corrugated sheet-metal prop, which, in the traveling position, is folded up under the pole, partly enveloping it, and secured to it by a positive hook on the prop itself, and a staple attached to the pole, passing through a slot in the prop.

This prop can turn about its hinge only in the direction of the length of the pole for a little more than 90 degrees. In the earlier construction shown in the drawing the pole prop was made of 1-inch gas pipe and secured at one end in an eye in the doubletree-bolt strap, and supported, when not in use, by the pole-prop hook. A folding prop for the end of the pole was also provided, but both of these have been rendered obsolete by the adoption of the corrugated sheet-metal prop described above.

The ammunition chest, 44¾ inches long by 26⅛ inches wide by 12½ inches deep, is mounted upon the limber frame in rear of the footboards. It is made of whitewood (excepting the front, which is of oak), 1 inch thick, strengthened by six corner plates—four for the ends and sides and two for the ends and bottom. The rear side is protected by a corrugated plate. These plates are fastened by ¼-inch copper rivets, except at the bottom, where iron wood screws are used.

The front stays are secured to the chest with one iron rivet each on the bottom and four iron rivets on the front. A back stay is secured to the box with two iron rivets on the bottom and four rivets on the back.

There is a forged-iron handle at each end of the chest, secured to it by four rivets. The lid is hinged with strap hinges, each having one rivet on the bottom, four rivets on the back, and six rivets on the lid. The hasp strap extends across the lid, to which it is attached by six rivets. The hasp-safe plate is attached to the front edge of the top by two screws. The turn-buckle, by which the hasp is secured in position, is mounted upon the turn-buckle pivot, whose plate is riveted to the front of the box, inside and out, by two rivets.

The interior of the ammunition chest in service is divided by two wooden partitions, held in place by being rabbeted into the front and back, and further secured by two through transom rivets. Each end compartment is 18¼ by 24⅛ inches in the clear, and is subdivided by brass partition plates so as to hold twenty-one projectiles. Cartridges are also carried in the middle compartment, which is 41 by 24⅛ inches.

The subject of the interior packing for ammunition chests is, however, not yet settled, and a decided change from the above will probably be made in future constructions.

There were two small compartments on the underside of the lid, in one of which the rear sight was carried. In the present arrangement of the packing these compartments have been removed, and the rear sight will be carried in its leather case in one of the footboard compartments.

The lid of the chest is supported, when open, by a brass hinge prop. The chest is secured on the frame by the ammunition-chest staple, whose branches pass through the top flanges of the middle rail in rear of the footboards, and by the two ammunition-chest bolts and nuts passing through eyes in the front stays.

The chest is covered with heavy cotton duck, well oiled.

The following articles are carried on the limber, viz:

In the ammunition chest—Forty-two rounds of ammunition and two gunner's haversacks.

On top of the chest, strapped to the chest lid—Two paulins and one leather cushion.

In the cylindrical primer and obturator boxes, under the ammunition chest—One spare gas check and two boxes of primers.

In the right-side footboard compartment—One oiler, one wheel-grease can with spatula, and one tool box, containing one screw wrench, one iron nut wrench, one cold chisel, one bastard file, one hand hammer, and one steel punch.

Digitized by Google

In the left compartment—Four canvas water buckets, the rear sight, and small stores.

Four cannoneers' knapsacks can be carried on the footboards under a boot arranged to be buttoned over them.

Weights of the gun, gun carriage, limber, and equipment.

Number.	Articles.	Weight.		Total.	
		Lbs.	*Ozs.*	*Lbs.*	*Ozs.*
1	3.2-inch B. L. rifle			829	
1	Carriage, with brakes—heavy			1,300	
	Carriage, with brakes—light			(1,166)	
1	Jointed sponge and rammer, with sponge cover	7			
2	Short rammers and sponges combined, and covers	7	14		
1	Prolonge (section picket rope)	15	8		
2	Primer pouches	1			
2	Lanyards		8		
				31	14
1	Limber, complete, with neck yoke			957	4
1	Wheel-grease can and spatula	5	8		
1	Breech sight	2	2		
1	Breech-sight pouch		9		
1	Sperm oiler		7		
1	Tool box, with tools	9	2		
1	Pole prop	2	8		
2	Paulins, 11 by 11 feet	46			
1	Knapsack boot	3	8		
2	Gunners' haversacks	4	6		
				74	2
42	Projectiles (shell and shrapnel), 13.5 pounds each	567			
44	Cartridges, each 3¾ pounds	165			
	Cartridge bags	2	12		
				734	12
	Total—for heavy carriage			3,927	
	Total—for light carriage			3,793	
	Weight per horse with heavy carriage			654.5	
	Weight per horse with light carriage			632	

CAISSON FOR 3.2-INCH B. L. RIFLE.

The construction of the caisson is very similar to that of the limber. The side and middle rails are lengthened and the latter terminates in a lunette, by which the caisson is coupled to its limber. The limbers for the carriage and caisson are identical.

Two ammunition chests are bolted to the iron body of the caisson in the same manner as is the single chest to the body of the limber.

On the rear end of the middle rail is bolted the spare-wheel axle bolster. Upon the axle, secured by a toggle through an eye, is mounted the spare wheel. A spare pole is carried immediately beneath the middle rail, and is supported at the rear by means of an iron stirrup under the spare-wheel axle bolster, and at the front by an attachment with key bolt on the middle rail, just in rear of the lunette.

Two long-handled shovels are carried beneath the caisson midway between the middle and side rails, one on each side. The concave faces of the blades are toward, and rest against, the axle, the shovel points being pressed into staple straps in rear of the axle, and the shovel handles, afterwards, into attachments on the front crossbar, against which the ends of the handles rest.

Digitized by Google

These attachments are positive; the handles must be secured in them or they will immediately fall down, and once in, they can not get out unless released by hand.

The pickaxes, which must be put on before the shovels, are carried beneath by fixtures attached to both middle and side rails. The ends of the handles are brought together, the pointed halves of the blades overlapped, one in advance of the other. The handles are then passed into a broad strap of sheet metal depending from the middle rail, the outer blade ends resting on brackets or shelves on the side rails. In this position the overlapping blades should be immediately in front of a bracket or shelf on the middle rail, which is to support the picks. They should be pushed forward onto this shelf until a bolt, previously raised, falls behind them.

This bolt passes through bolt holes in the middle rail top and a transom riveted to its flanges below. It has an oval ring at its head and a small pin or stop below the transom. This pin limits the upward motion of the bolt, but allows sufficient room to pass the pick-axes under it. Once down, the bolt can not rise of itself. To raise it, the hand must be passed under the footboard and the oval ring turned up vertically so that it can pass up through a slot in the footboard. The bolt may then be pushed up from below high enough to pass the pickaxes under.

The axes and spades are carried between the chests. A board is permanently riveted to the side rails at each end. Within the rails on opposite sides are slots of the length and form of the ax blades, into which the blades are placed vertically, the helves resting on top of the board. The spade blades, spade handles crossed, are placed on the board, one at each side, between the helves of one and the blade of the other ax, concave face toward the ax blade, the ends of the spade blades against the outer branch of the upright metal stops fastened to the board ends. The handles of the spades are then forced down until the ends rest on top of the axes. In this position they retain the axes in place, and can not be shaken out on the march.

When metal water buckets are carried they are made in pairs, one fitting into the other "nest" fashion, the bail of the outer bucket being made in two parts, forming an "eye" and a spring hook for connection in the center. They can be carried on any part around which the bail can be passed and hooked. In the rear the crossbar and floor rods offer secure and suitable places. In the buckets the lanterns can be carried securely, one in each nest, with a little hay packing.

The metal water bucket has recently been abandoned in favor of those made entirely of canvas, which fold up into a very small compass and are carried in the left footboard compartment.

Lanterns will, in future, be carried in canvas bags hung across the spare-wheel axle bolster in rear of the caisson. They will hang below the floor rods, and will be so arranged as not to swing on the march and thus spill the oil.

The maneuvering handspike is carried along the right rail, outside. A bronze socket for the large end is secured to the right axle, and under the footboard is an attachment with a swing bolt for the small end. A bronze ring on the handspike, when in position, falls immediately in rear of the attachment seat and prevents any forward motion.

The first form of caisson has road brakes, one on each side, permanently attached at the eye end to the axle straps. These are hooked when not applied to the wheels, by means of a simple latch on the forward chest handles. A chain with a snap hook engaging about the chest handle prevents the brake from falling too far when applied to the wheel.

In order to lock a wheel, unhook the brake by turning the latch about its pivot until free from the chest handle, pass the shoe over the tire, and drop the brake.

Digitized by Google

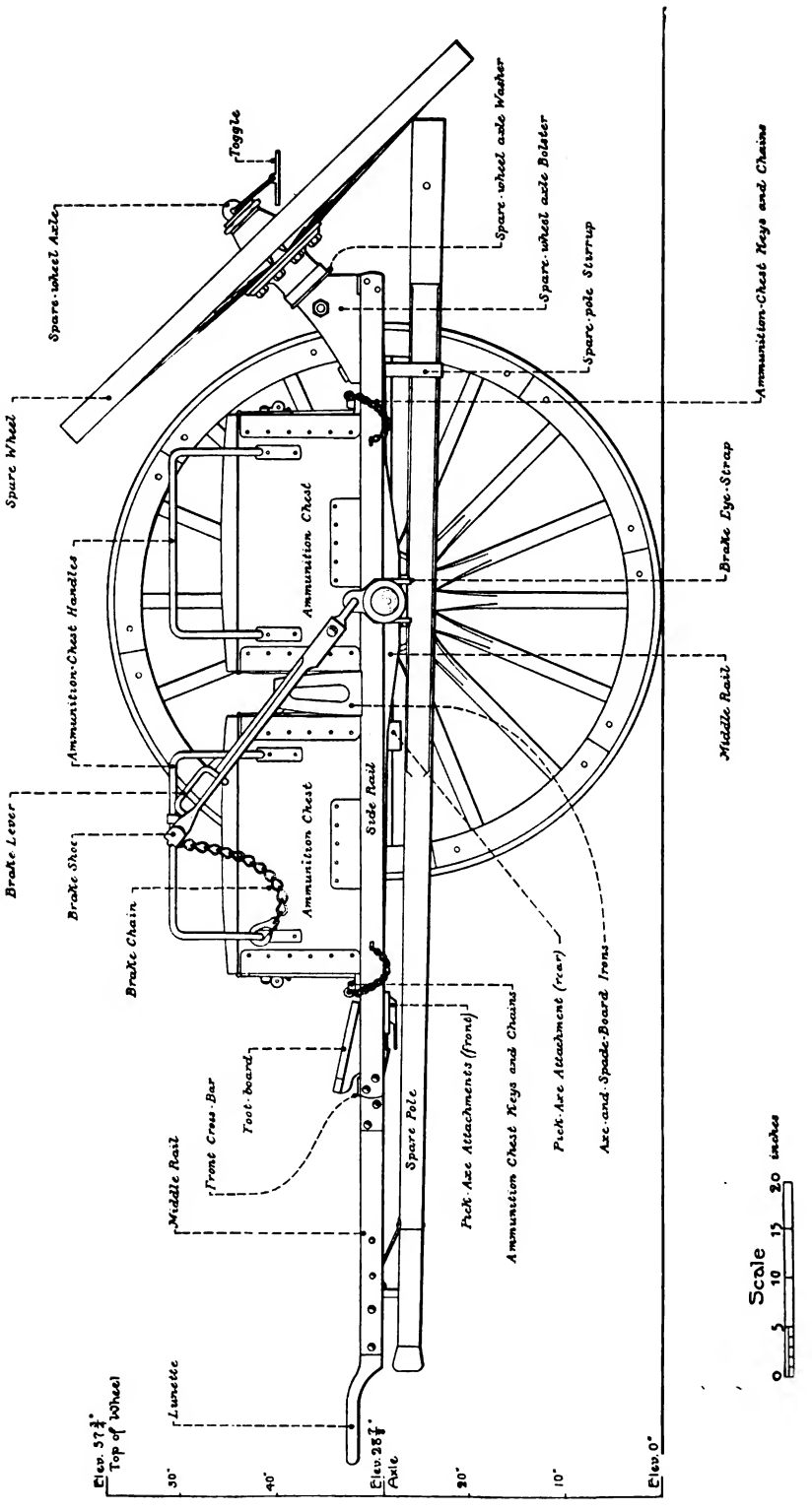

Fig. 37 – 3·2 inch B.L. Field Rifle. – Steel Caisson

Digitized by Google

Digitized by Google

To unlock the wheel, raise the locking lever and turn it over to the rear until the brake is lifted from the wheel sufficiently to allow the shoe to be seized with the hand. The shoe can then be forced back on the eye tang to the locking position, and the locking lever folded into place and the brake fastened for traveling.

Caissons are now furnished with lever road brakes, each side operated separately, so that either one or both wheels can be affected, but otherwise similar to ordinary wagon brakes. The shoes of the brakes are applied in rear of the wheels and thus form mud scrapers on the march. The brake levers stand upright, inside the wheels, opposite the front side of the rear ammunition chest, and can be operated by a cannoneer on either the front or rear ammunition chest.

A section of picket rope can be carried coiled around the spare-wheel axle bolster.

Two extra boxes of projectiles can be transported, one on each side of the spare-wheel axle bolster, resting on the floor rods and lashed in position.

Weight of caisson and equipment.

Number	Articles.	Weight.		Total.	
		Lbs.	*Ozs.*	*Lbs.*	*Ozs.*
1	Caisson, complete, with brakes and neck yoke			2,216	8
2	Axes, handled	10			
2	Pickaxes, handled	15			
2	Shovels, long-handled	8			
2	Spades, short-handled	10			
2	Paulins	46			
4	Water buckets (2 nests)	15			
1	Lantern	1	8		
1	Prolonge (picket rope section)	15	8		
1	Pole prop	2	8		
1	Grease can and spatula	5	8		
1	Knapsack boot	3	8		
				132	8
126	Projectiles (shell and shrapnel), 13.5 pounds each	1,701			
132	Cartridges, 3¾ pounds each	495			
132	Cartridge bags	8	4		
				2,204	4
	Total weight			4,553	4

COMBINED FORGE AND BATTERY WAGON FOR 3.2-INCH RIFLES.

The dimensions and construction of the iron body for the battery wagon are the same as for the caisson.

The limber, constructed in the same manner as the limber for the carriage or caisson, except that the packing for ammunition in the chest and the primer and obturator boxes are omitted, carries all that pertains to the forge with the exception of the anvil, vise, and sledge.

The battery-wagon body is carried on the rear wheels and is made of whitewood and oak, with three compartments. The largest is entered from either side of the top, the openings being covered with hinged lids. A door at the front opens into the other two compartments, which are of equal size, and just contain, one a chest of saddler's and the other a chest of carpenter's and wheelwright's tools. The tools are all arranged so that they can be taken out one by one without disturbing the rest, except the jack plane, which is behind the smoothing plane. The chests are provided with handles so that they can be taken out of the wagon and carried about; they are furnished with locks and keys. In

Digitized by Google

addition to the space in these chests occupied by the tools, there is enough for small stores, for which two canvas bags are provided for each chest.

In the main compartment are carried the grindstone and cans for sperm and coal oil, secured by permanent packing. There is also space in this compartment for such stores and spare parts as may be designated by the battery commander. At the rear of the wagon body is a folding rack for forage, and there is a rail around the top to which forage can be lashed. The rear wheels are provided with road brakes like those on the caisson. In the traveling position the brakes are secured against the side of the wagon body by spring jaws. The end of the chain that limits the fall of the brake is snapped into a staple on the side. The brakes are operated in a similar manner to those of the caisson.

A change in these brakes is under consideration, and there is no doubt that the lever road brake adopted for the caisson will be applied to the battery wagon.

The anvil is carried on the middle rail in front of, and bracing the door of the chest compartment. It is secured by a bolt with a crank nut passing through its body and the middle rail. A vise is permanently bolted on the middle rail in rear of the lunette, and a sledge hammer is secured along the rail between the vise and the anvil. The lunette prop is carried by suitable attachments on the march between the flanges of the middle rail.

The forge chest contains—

- 1 portable "Empire" forge, complete, modified for army use.
- 1 hand hammer, handled.
- 1 riveting hammer.
- 1 smith's tongs, 11-inch.
- 1 tongs for ¼-inch iron.
- 1 tongs for ½-inch iron.
- 1 chisel for hot iron, handled.
- 1 chisel for cold iron, handled.
- 1 fore punch and creaser, handled.
- 1 hand cold chisel.
- 1 12-inch flat bastard file.
- 1 round hand punch.
- 1 hardy.
- 1 12-inch screw wrench.
- 1 2-foot rule, wood.
- 1 square, steel.
- 1 oiler.
- 1 6-inch iron file handle.
- 1 small wrench for portable forge.
- 1 fire rake.
- 1 fire shovel.
- 2 small canvas bags for nails and stores.
- 2 smith's leather aprons.
- 1 sole-leather shoeing box, and the following farrier's tools, viz:
  - 1 shoeing hammer.
  - 1 pritchel.
  - 1 16-inch shoeing rasp.
  - 2 shoeing knives.
  - 1 toe knife.
  - 1 shoeing pinchers.
  - 1 clinching iron.
  - 1 nail punch.

The carpenter's and wheelwright's chest contains—

- 1 brace with 12 assorted bits.
- 1 12-inch drawing knife.
- 1 20-inch handsaw.
- 1 26-inch ripsaw.
- 1 hand ax.
- 1 claw hammer.
- 4 framing chisels (¾, 1, 1¼, and 2 inch).
- 3 framing gouges (½, 1, and 1½ inch).
- 1 12-inch screw wrench.
- 1 jack plane.
- 1 smoothing plane.
- 1 spokeshave.
- 1 2-foot rule.
- 10 assorted brad awls with (and contained in) handle.
- 1 try-square.
- 1 scribing awl.
- 12 assorted saw files (4 and 6 inch).
- 1 10-inch wood rasp.
- 1 10-inch wood file.
- 1 oiler.
- 1 8-inch oilstone.
- 1 gauge.
- 1 10-inch compass.
- 1 table vise.
- 1 pinchers.
- 1 wood mallet.
- 6 auger bits (¼, ½, ¾, 1, 1¼, and 1½ inch).
- 1 patent auger handle.
- 3 file handles, iron (4-inch flat, 4-inch round, and 5-inch).
- 1 Chesterman Sheffield linen tapeline.
- 2 small canvas bags for small stores.

Digitized by Google

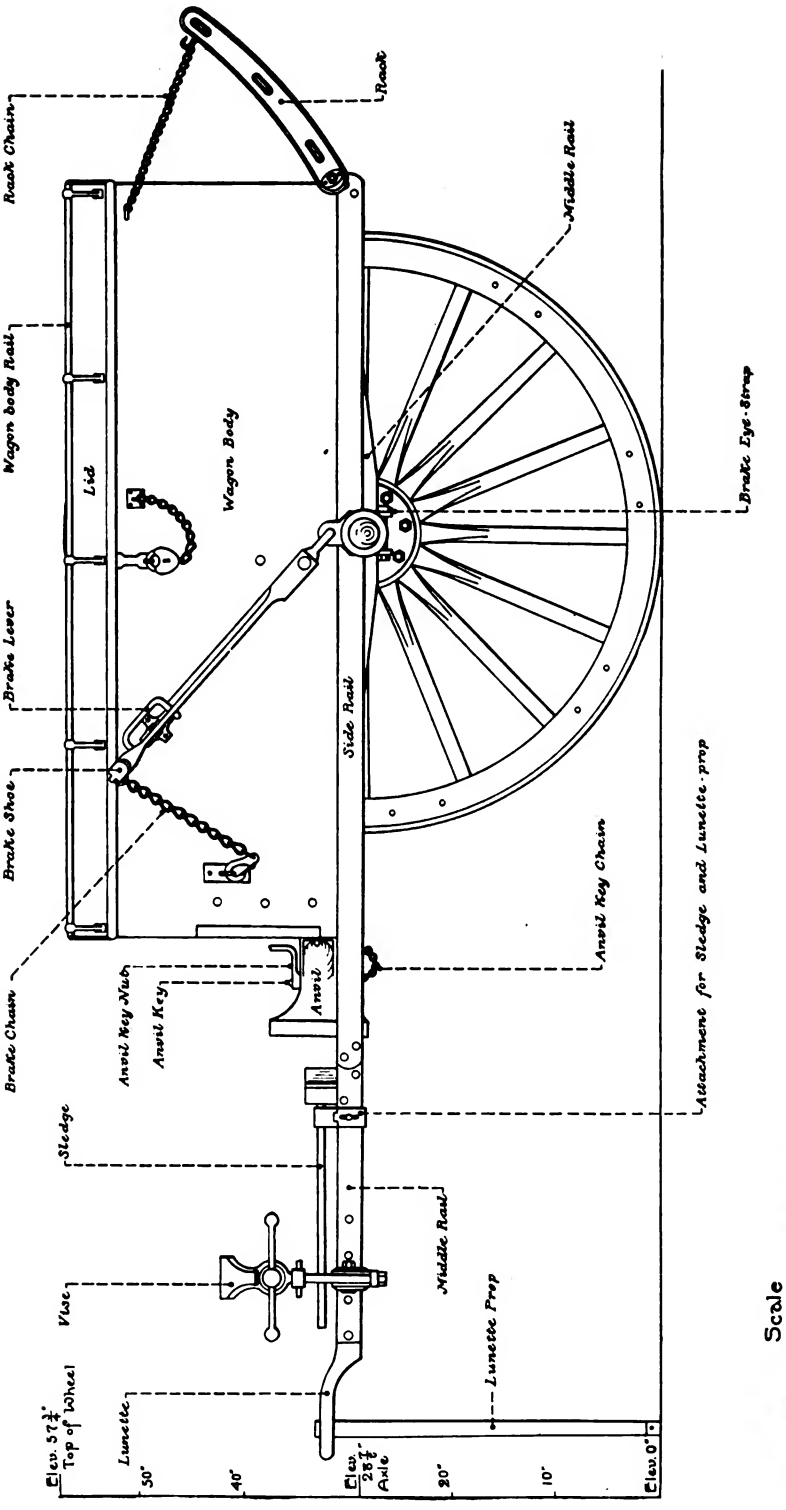

Fig. 38 – 3·2 inch B.L. Field Rifle. – Steel Combined Forge & Battery Wagon

Digitized by Google

Digitized by Google

The saddler's chest contains—

1 round knife.
1 shoe knife.
1 draw gauge.
6 assorted stitching awls, handled.
1 rivet set (2 holes).
1 revolving punch (4 tubes, Nos. 4, 5, 6, and 7).
1 claw tool.
1 6-inch compass.
1 creaser, wood.
1 cutting nippers.
1 riveting hammer.
1 edge tool, No. 2.
1 rule, 2-foot, wood.
1 oilstone.
1 pliers, large.
1 driving punch, No. 5.
1 stitching horse, complete.
2 small canvas bags for small stores.

Weights of forge and battery wagon, and equipment.

Number.	Articles.	Weight.		Total.	
		Lbs.	*Ozs.*	*Lbs.*	*Ozs.*
1	Forge and battery wagon, complete, with brakes and neck yoke, but without stores			2,081	
1	Set of blacksmith's and farrier's tools, complete	39	8		
1	Coal bag	4	8		
1	Forge, complete	61	8		
1	Tool chest, wheelwright's, complete	55			
1	Set tools, wheelwright's, complete	47	8		
1	Tool chest, saddler's, complete	50			
1	Set tools, saddler's, complete	29	8		
1	Pole prop	2	8		
1	Vise	32			
1	Hammer, sledge	10	8		
1	Anvil	100			
1	Battery wagon lunette prop	5			
1	Grindstone, flanges, shaft, and crank, complete	50	8		
1	Grindstone frame, complete	18			
1	Can for coal oil	7	8		
1	Can for sperm oil	1			
1	Grease can and spatula	5	8		
1	Lantern	1	8		
2	Water buckets	7	8		
2	Paulins	46			
1	Prolonge (section picket rope)	15	8		
				590	8
	Total weight			2,671	8
	Weight per horse, without stores			445	

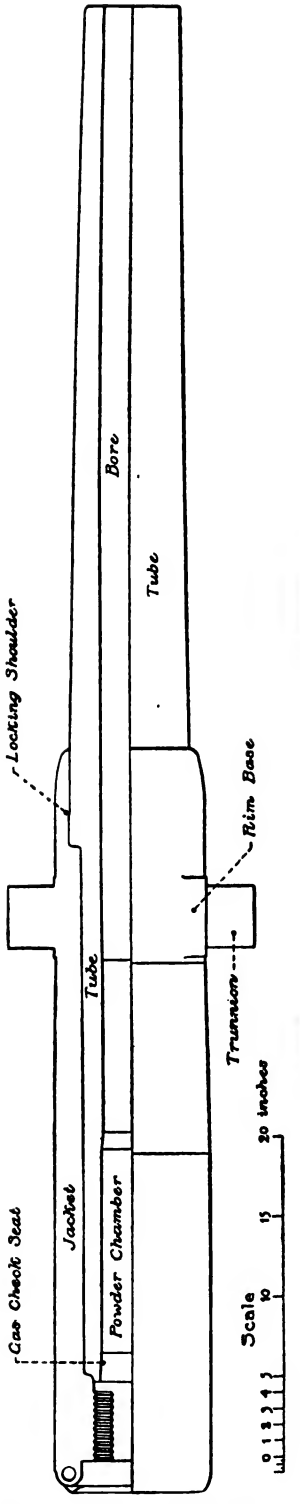

Fig. 39. 3.6-inch Breech-loading Rifle.

THE 3.6-INCH B. L. FIELD GUN.

The 3.6-inch gun is a breech-loading rifle of greater weight and power than the 3.2-inch, which latter is more especially adapted to the service of the horse-artillery arm.

It can be readily but slowly moved, and will be principally used for "batteries of position." It will follow the movements of large bodies of troops, defend earthworks and important positions on the field of battle, prepare the way for an advance of other arms of the service by beginning the action at long range, etc.

The gun has essentially the same form and characteristics as the 3.2-inch rifle of the model of 1890. It consists of a tube, jacket,

Digitized by Google

and breech mechanism. The trunnions are on the jacket, forming a single forging. The breech mechanism is the same, except in dimensions, as that of the 3.2-inch rifle.

The sights, projectiles, and fuzes are the same, except in proportions, as those used with the lighter field gun.

The principal weights, dimensions, etc., of the 3.6-inch rifle are as follows:

Weight	pounds	1,181
Total length	feet	7.79
Length of bore	calibers	23.5
Maximum diameter of breech	inches	9.8
Diameter of muzzle	do	6
Diameter of trunnions	do	3.8
Length of trunnions	do	3
Distance between rimbases	do	9.5
Distance of axis of trunnions from muzzle	do	57.25
Rifling:		
Number of grooves		26
Width of grooves	inches	0.3162
Depth of grooves	do	0.04
Width of lands	do	0.1188
Twist of rifling	calibers	1 in 50 to 1 in 25
Powder chamber:		
Diameter	inches	3.9
Length	do	12.275
Capacity	cubic inches	149.2
Total capacity of bore	do	894.5
Powder charge:		
Kind of powder		UF Sphero-hex.
Weight of charge	pounds	4.1875
Density of loading		0.7769
Projectile:		
Weight of projectile (filled)	pounds	20
Ratio of weight to weight of piece		$\frac{1}{59}$
Weight of bursting charge	ounces	14.5
Length of projectile	calibers	3.25
Sectional density $= \frac{W}{d^2}$		1.5432
Travel of projectile, in bore	calibers	20.08
Muzzle velocity	foot-seconds	1,550
Pressure per square inch in powder chamber	pounds	35,000
Muzzle energy	foot-tons	333.1
Penetration in steel at muzzle	inches	3.9
Forgings:		
Total weight	pounds	1,803
Weight of tube	do	838
Weight of jacket	do	855

CARRIAGES FOR THE 3.6-INCH B. L. RIFLE.

The only carriages for this gun at the present time (February, 1895) are those that were originally made for the 3.2-inch gun. The first fifty 3.2-inch carriages had flask plates 0.25 of an inch thick instead of 0.2 of an inch, as now made. These carriages, twenty-five of which were made with the double screw-elevating device and twenty-five with the first form of lazy-tongs device, are now being altered for 3.6-inch guns. The upper front transom

Digitized by Google

Fig. 40 – 3·6 inch B.L. Field Rifle. – Steel Breech Mechanism

LOCKED, READY FOR FIRING

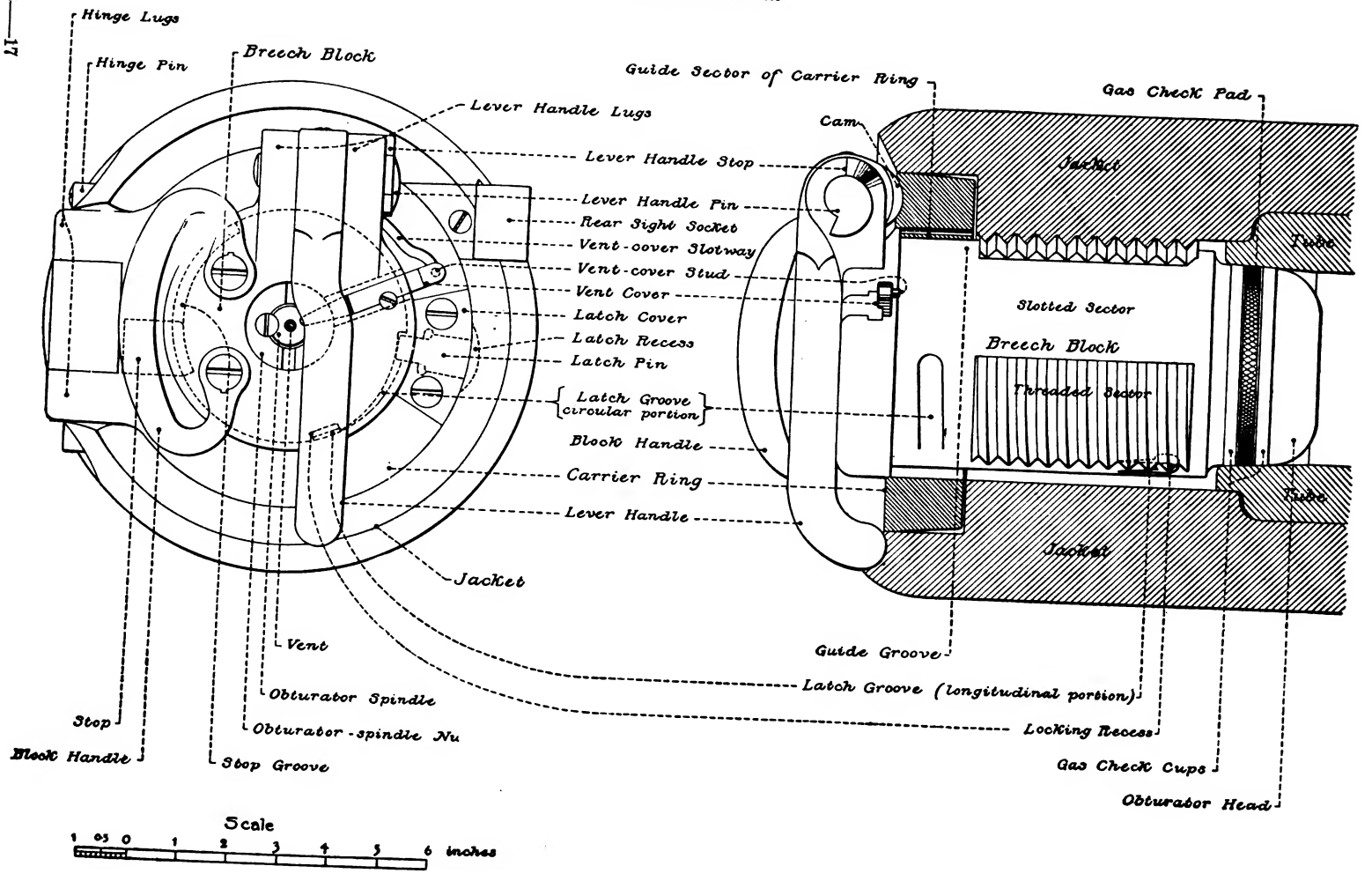

Digitized by Google

Digitized by Google

under the trunnion beds, which has been abandoned for the assembling bolt and separator, is cut out, leaving only enough metal on each side to hold the eyebolts of the forked radial bar for the elevating device, and cap-squares with eyebolts have been substituted for the old cap-squares with chin bolts and eyebolts.

The double screw-elevating device, being suitable, is retained for the twenty-five carriages having it, but will be put on no more.

The other device, the first form of the lazy-tongs system, is not suitable for the 3.6-inch gun, as it could not be operated at high elevations on account of the length of the gun. This device is therefore being replaced by another form of lazy tongs, operated by bevel gears and a crank handle at the side, like that of the double screw.

The 3.6-inch and the 3.2-inch guns and carriages are interchangeable on the battlefield, with the limitation that the 3.6-inch gun on the 3.2-inch carriage can not be given high elevation.

The limbers and caissons of the two guns will differ only in the interior packing of the ammunition chests, and the battery wagon and forge will be the same for both.

THE 3.6-INCH B. L. FIELD MORTAR.

This is a short, portable rifled piece intended for vertical fire, chiefly against the personnel of the enemy. It is used to reach troops protected by intrenchments or inequalities of the field from the direct fire of the field guns. The range of this mortar is about 2 miles. It fires the same projectiles as the 3.6-inch field gun. The field of fire with shell and shrapnel embraces all ranges from 300 to 3,500 yards, reduced charges being used for the shorter distances.

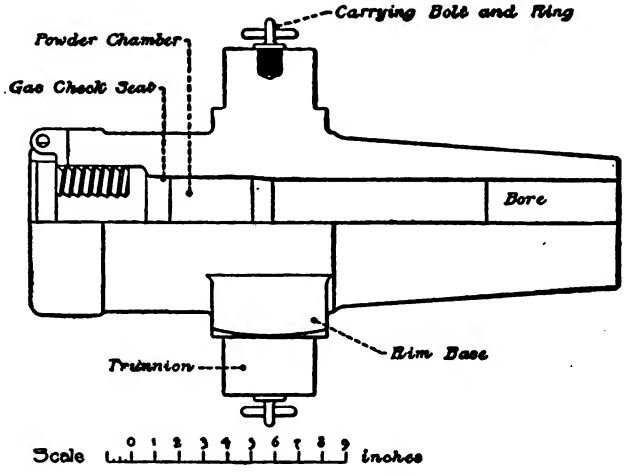

Fig. 41. 3.6-inch Breech-loading Mortar.

In construction, the body of the mortar is made of a single piece of steel, forged, oil tempered and annealed, and has the trunnions forged solid with the piece.

The mortar is made to withstand a pressure of 22,000 pounds per square inch, but in practice this is limited to 18,000 pounds.

The breech mechanism is of the slotted-screw form, and generally similar to that of the field guns, except that the Freyre gas check is used and the breechblock has a different handle, locking device, and vent cover.

Digitized by Google

In the Freyre system the breechblock is the same as in that ordinarily used, and the spindle traverses it axially in the same manner. The spindle, however, terminates in a head having the form of a conical frustum. This head is embraced by a ring with a conical interior surface, and its exterior surface in light contact with the walls of the gun. The base of the ring rests against the face of the breechblock, and the interior surface of the ring is so adjusted as to cause a slight space to exist between the head and the face of the breechblock. When the powder gases act, the head is forced back through the space above referred to and the ring is expanded into firm contact with its seat, thus preventing the escape of gas.

The advantage of the Freyre gas check is that it takes up less space than the mushroom head with its asbestus and tallow pad.

The handles project about an inch from the rear of the breechblock and turn outward at right angles, overlapping the breech of the mortar on either side by about 2 inches. These handles are each mortised into the rear of the breechblock and secured by a screw.

The breechblock is locked in the firing position by means of a locking pin with a wing nut. One side of this pin is squared off, and when this is toward the carrier ring the block is free to rotate, but when turned to the right through an angle of 45 degrees, the round part of the bolt rests against a shoulder formed by hollowing out the upper corner of the left-hand guide sector of the carrier ring, thus holding the block against rotation. When unlocked, a vent cover attached to the locking pin swings over the vent but revolves out of the way when the pin is turned to lock the breech.

The bolt is held against accidental turning by the spring of the vent cover. There are circular recesses at either end of the long part of the vent cover, in which the heads of two round-headed screws engage in its two positions, so that some force is required to turn the wing nut or locking handle.

Steel eyebolts are screwed into the center of the faces of the trunnions to carry steel rings, 1.5 inches in diameter, to facilitate the transportation of the piece.

The principal weights, dimensions, etc., of the 3.6-inch mortar are as follows:

Weight	pounds	244
Total length	feet	2.05
Length of bore	calibers	5.19
Maximum diameter of breech	inches	7.8
Diameter of muzzle	do	5.4
Diameter of trunnions	do	3.8
Length of trunnions	do	2.5
Distance between rimbases	do	9.5
Distance of axis of trunnions from muzzle	do	14.6
Rifling:		
Number of grooves		20
Width of grooves	inches	0.4454
Depth of grooves	do	0.045
Width of lands	do	0.12
Twist of rifling	do	1 in 40 to 1 in 25
Powder chamber:		
Diameter	inches	3.8
Length	do	2.835
Capacity	cubic inches	33.2
Total capacity of bore	do	200.2
Powder charge:		
Kind of powder		UF Sphero-hex.
Weight of charge	pounds	15
Density of loading		0.8389

Digitized by Google

Fig. 42 — 3·6 inch B.L. Rifled Field Mortar.— Steel Breech Mechanism

LOCKED, READY FOR FIRING

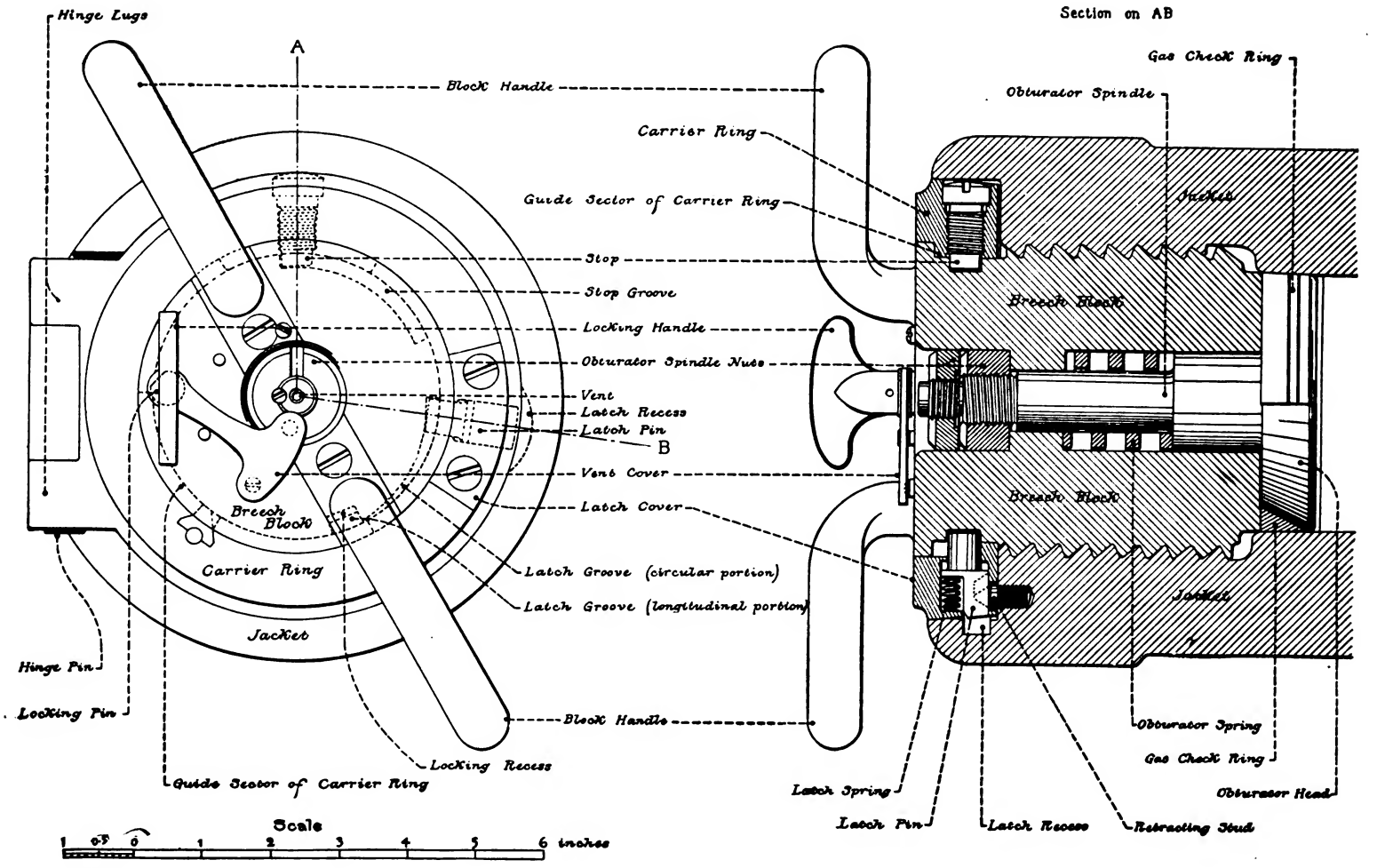

Digitized by Google

Digitized by Google

Projectile:		
Weight of projectile (filled)	pounds	20
Ratio of weight to weight of piece		$\frac{1}{12}$
Weight of bursting charge	ounces	14.5
Length of projectile	calibers	3.25
Sectional density $= \frac{W}{d^2}$		1.5432
Travel of projectile, in bore	calibers	4.47
Muzzle velocity	foot-seconds	650
Pressure per square inch in powder chamber	pounds	16,000
Muzzle energy	foot-tons	58.6
Penetration in steel at muzzle	inches	1.1
Forgings:		
Total weight	pounds	319
Weight of tube	do	277

CARRIAGE FOR THE 3.6-INCH B. L. FIELD MORTAR.

This carriage is made of cast steel. The body of the carriage consists of two side pieces united by two transoms, all cast in a single piece. The side pieces are 1 inch thick, and have the general form of an isosceles triangle, of which the base is the front line of the frame, 14 inches long, and the two sides are 36 inches long. The carriage frames are cast with flanges about their edges and with triangular openings in front and rear of a 1½-inch web, which stands vertically under the trunnion beds. The thickness of the frames at the trunnion beds is increased on the outside so as to give a bearing of 2½ inches to the trunnions. The cap-squares are held in place by chin bolts at the rear, and by key bolts and keys at the front. The cap-square key is attached to the carriage by a chain. A pintle fork, whose interior radius is 1 inch, is bolted to the front transom. This fork, in the firing position, partially encircles the pintle block, which is bolted to the platform, and allows the carriage to be readily pointed, but does not prevent it from recoiling. The carriage is stiffened by bolting through the side pieces about 5 inches from their rear edges with a ¾-inch steel bolt, passing through a piece of 1⅛-inch gas pipe.

A circular hole, 3 inches in diameter, is left in the side frames about midway between the trunnion beds and the rear of the carriage, through which a handspike can be thrust when it is desired to carry the mortar and carriage by hand. At the center of the front transom is bolted the elevating clamp, which embraces an arc bolted to the underside of the mortar. A lever on the left side of the carriage turns a shaft, which, having a left-hand screw on one side of the center and a right-hand screw on the other, causes the clamp to take hold of the arc when the elevation has been given with the quadrant. At the front lower corner, and on the outside of each carriage frame, is bolted a toggle, to which a restraining rope can be attached to check the recoil. This rope passes around an anchor stake 4 inches in diameter and 4 feet long, sunk in the ground in front of the mortar platform.

The platform for the mortar consists of two side pieces of 3-inch oak or yellow pine, into which are framed and secured, by iron rivets, eleven crosspieces of the same material. A 4 by 3 anchor block is bolted to the rear crosspiece by three bolts. The pintle block is of cast iron and is bolted to the front of the platform by four wrought-iron bolts. The platform is held in position by eight stakes—two on each side, two in rear, and two in front, the last passing through square wrought-iron straps, attached to eyepieces, which are bolted to the front end of the platform.

At a suitable point in the axis of the platform is placed a brass socket, in which turns the brass pivot at the end of the pointing scale.

Digitized by Google

The pointing scale is of hard wood, graduated on one side, the unit of the scale being $\frac{1}{1000}$ of the range, and each division $\frac{1}{100}$ of the range. A brass index slide moves with friction along the length of the scale and is clamped by a screw when regulated. For reference marks a brass screw is placed at the rear end of each sidepiece, and the scale is so arranged that it can be applied to either side. The carriage has a motion around its pintle of about 15 degrees on either side of the axis of the platform.

Digitized by Google

Fig. 43 — 3·6 inch B.L.Rifled Mortar. — Steel Carriage & Platform

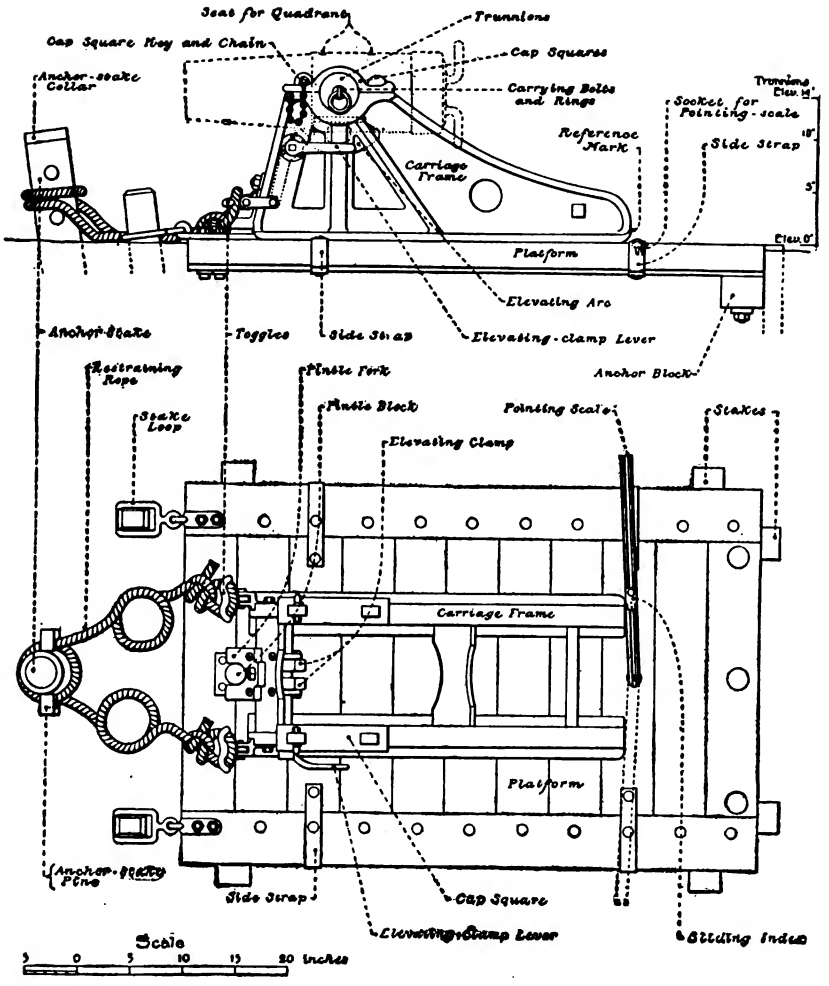

Digitized by Google

Digitized by Google

CHAPTER V.

SIEGE CANNON AND CARRIAGES.

The modern siege cannon adopted for the military service are the 5-inch rifle, the 7-inch howitzer, and the 7-inch mortar—all breech-loading.

THE 5-INCH B. L. SIEGE RIFLE.

This gun is constructed on lines similar to those of the 3.2-inch field gun, model 1885. The number of parts is practically the same, and their arrangement nearly identical.

The gun consists of a tube, jacket, trunnion band, sleeve, locking ring, key ring, base ring, and breech mechanism.

The tube is 138 inches long, with a maximum diameter of 9.414 inches and a minimum of 8 inches. The jacket is 55.57 inches long. It is shrunk on the tube abutting against a shoulder, and varies in exterior diameter from 15 inches to 13.50 inches. The trunnion band is shrunk over the recessed end of the jacket and is 11.50 inches long, varying in diameter from 14.40 to 13.40 inches. The sleeve is in front of the trunnion band and is 20 inches long, tapering in diameter from 12.50 to 11 inches. The locking ring is in front of the sleeve, 5 inches long, and is shrunk over a shoulder on the tube and the key ring, which latter is cut in two and let into a groove around the tube. For a distance of 65 inches the tube is unsupported to the muzzle.

A base ring is screwed into the rear end of the jacket tightly against the rear end of the tube. The inside of this base ring is threaded and slotted for the breechblock.

The powder chamber is cylindrical, but connected with the shot chamber by a conical surface. The forward part of the projectile extends into the grooved portion of the bore and the band brings up against the lands, which are beveled at the rear.

The vent is axial through the obturator spindle. The breech mechanism varies very slightly from that of the field guns.

The breechblock is 8.20 inches long by 6.66 inches in diameter, and has three plain and three threaded sectors to correspond to the base ring. One-sixth of a turn therefore serves to lock or unlock the block when in place. The stem of the obturator passes through the center of the block. The rearmost thread of the block is not cut away and serves the purpose of closing the rear face of the breechblock against dust or weather and also as a stop when the block is pushed home. The means for guiding the block, locking it in and unlocking it from the carrier ring at the different stages of opening and closing the breech, are the same as in the field guns.

The lever handle for turning the block and the bronze handle for withdrawing it are fastened to its rear end.

The carrier ring carries the block when it is withdrawn and swung out of place in loading, and has its hinge in the jacket. It is $1\frac{5}{16}$ inches thick, and when closed against the end of the base ring it fills the space between the jacket and the block. The latch pin and its spring are in this ring.

Digitized by Google

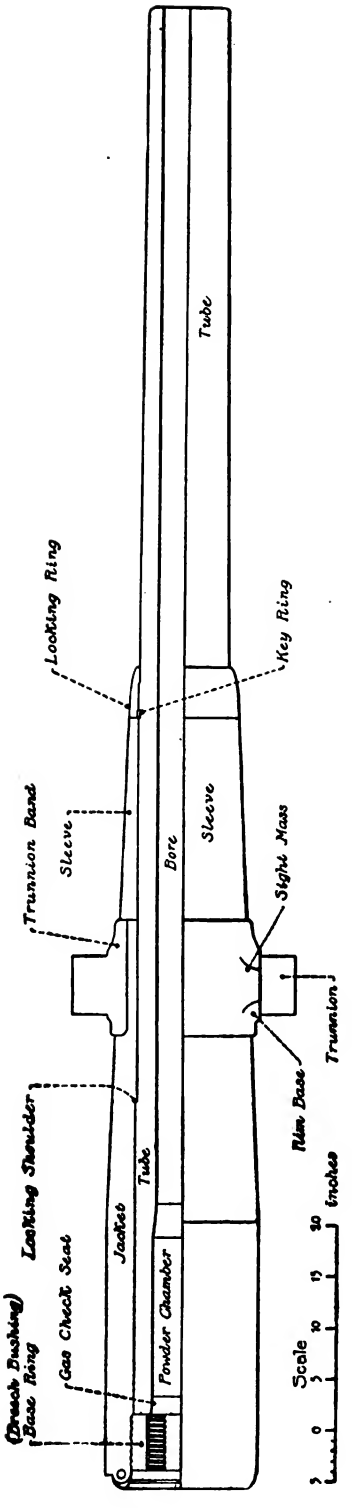

Fig. 44. 5-inch Breech-loading Rifle.

The obturator spindle terminates in front of the mushroom head, and in rear in a threaded end, upon which a hexagonal nut fits. This bears against a spiral spring on the spindle which acts to draw the mushroom head to the rear, thus compressing the rings and the plastic pad and holding them tightly against the head of the breechblock. The tension of this spring must be nicely adjusted, for if the nut is turned too tight the pad will fit too tightly in the bore, and if too loose, gas may escape.

The rear of the breechblock is hollowed out to allow room for the obturator-spindle nut, and the lever handle has more curvature in passing by the nut than in the 3.2-inch gun, so that the nut can be readily reached with a wrench.

The vent cover is on the left instead of the right side of the breechblock, as in the 3.2-inch gun, and consists of two parts—the cover proper and the vent-cover lever. The latter is a straight piece with a stud at one end, a square tenon terminating in a thread for a nut at the other, and a longitudinal slot near its middle point. The cover is curved, with a mortise in one end to fit on the tenon of the lever. The action of the vent cover when assembled with its tenon is as follows: The lever lies flat upon the rear of the breechblock, the stud at its outer end moving in a curved slot way, which causes it to advance toward and recede from the center of the block as it is turned, thus covering or uncovering the vent. A stud on the rear of the breechblock slides in the slot in the lever, causing the vent cover to move radially.

After firing, the block is turned to the left by the lever, which is first raised nearly vertically. After the block is turned on the spindle, the mushroom head remaining fixed, the lever is brought sharply down, which causes the cam-shaped head to bear against the carrier ring and force the block slightly to the rear. This frees the gas check from its seat. The handle then serves to draw the block through the carrier ring and to swing both clear of the bore.

The principal weights, dimensions, etc., of the 5-inch siege rifle are as follows:

Weight	pounds	3,660
Total length	feet	12.15
Length of bore	calibers	27
Maximum diameter of breech	inches	15
Diameter of muzzle	do	8
Diameter of trunnions	do	5.8
Length of trunnions	do	3.3
Distance between rimbases	do	15
Distance of axis of trunnions from muzzle	do	96.25

Digitized by Google

Fig. 45

5 inch B.L. Siege Rifle.– Steel

Breech Mechanism

LOCKED, READY FOR FIRING

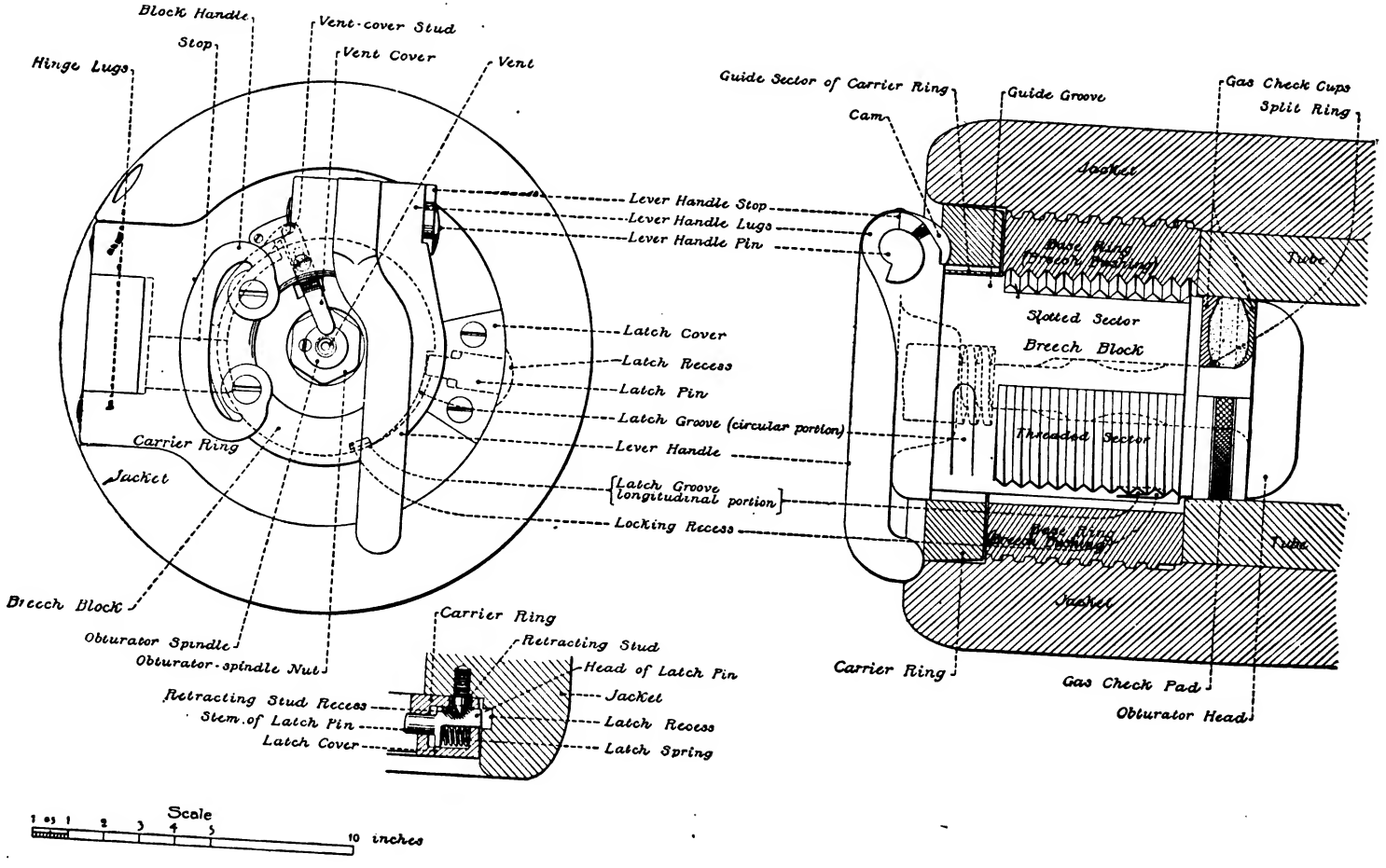

Digitized by Google

Digitized by Google

Rifling:		
Number of grooves		80
Width of grooves	inches	0.3736
Depth of grooves	do	0.05
Width of lands	do	0.15
Twist of rifling	calibers	1 in 50 to 1 in 25
Powder chamber:		
Diameter	inches	5.7
Length	do	15.15
Capacity	cubic inches	395.6
Total capacity of bore	do	2,824.5
Powder charge:		
Kind of powder		IB Spehro-hex.
Weight of charge	pounds	12.5
Density of loading		0.8746
Projectile:		
Weight of projectile (filled)	pounds	45
Ratio of weight to weight of piece		$\frac{1}{81}$
Weight of bursting charge	pounds	2.58
Length of projectile	calibers	3
Sectional density $= \frac{W}{d^2}$		1.8000
Travel of projectile, in bore	calibers	23.96
Muzzle velocity	foot seconds	1,830
Pressure per square inch in powder chamber	pounds	35,840
Muzzle energy	foot-tons	1,045
Penetration of steel at—		
Muzzle	inches	6.2
1,000 yards	do	4.6
2,500 yards	do	3.0
3,500 yards	do	2.5
Forgings:		
Total weight	pounds	5,543
Weight of tube	do	2,421
Weight of jacket	do	2,031

CARRIAGE FOR 5-INCH B. L. SIEGE RIFLE.

The carriage consists, essentially, of two flasks, parallel throughout, connected by a bottom and top plate and transom, and upper and lower axle plates. The parts of the flasks immediately under the trunnion beds are reenforced by two brace plates. The lower edges of the flasks and brace plates are flanged and connected by bolts with the axle plates.

The flasks are plates .5 of an inch thick, flanged along their upper and lower edges and riveted to the top and bottom plates.

The bottom plate, .25 of an inch thick is secured to the flanges of each flask by rivets .75 of an inch in diameter.

A shoe plate, .5 of an inch thick, is riveted to the bottom plate. A projection from the rear of the shoe plate affords a point of application for the end of a roller handspike.

The top plate, .25 of an inch thick, is connected by rivets .75 of an inch in diameter, to the flanges of the upper edges of the flasks. This plate extends from the end of the trail to that point at which it must terminate in order to allow an elevation of 30 degrees to be given to the gun.

Outside of each flask is a brace plate held by twenty-two rivets .75 of an inch in diameter. The lower edge of each brace plate is flanged and secured to the axle plates by six .75-inch

Digitized by Google

bolts. The upper edge of each brace plate extends 3.5 inches in front and 4.25 inches in rear of the trunnion. The lower edge extends far enough to the front and rear of the axle to receive six assembling bolts. The front and rear edges of the brace plates are hollowed out to diminish the weight.

A front transom, .5 of an inch thick, lies between the braces and is secured by twelve bolts .75 of an inch in diameter, which pass through flanges on the transom and through the flasks and braces.

The transom is cut out above to allow for the elevation and depression of the piece; it is cut out below to diminish the weight.

A rear transom of nearly the same dimensions as the one just described is added to prevent the flask from buckling outward between the trunnion bed and elevating screw.

Each trunnion bedplate is made by curving a T bar, and is fastened by four .75-inch bolts through its web and through the brace plate and flask. The exterior bolts carry the eyebolts by which the cap-square is secured.

The wheels, like those used on the field-gun carriage, are of the Archibald pattern. They are 5 feet in diameter, with sixteen spokes 3 inches thick, having a dish of 1.5 inches. The steel tire is 4 inches wide and ⅝ of an inch thick. The nave box, of malleable iron, is 12.75 inches long. The wheels weigh 335.5 pounds each. They are secured by linchpins and have drag washers.

When the gun is mounted upon this carriage the axis of the trunnions is 72 inches above the horizontal plane upon which the carriage is supported when unlimbered, and the same axis is 10 inches in rear of a vertical plane containing the axis of the axle. The distance from the line joining the points of support of the wheels to the line of support of the trail plate is 100 inches.

The carriage is constructed of steel throughout. The elevating apparatus consists of a double screw, the motion of the head of which is governed by a radial bar or fork, attached at the fork ends to the flasks, below and slightly in rear of the axis of the trunnion beds. The screw nut of the elevating screw is journaled in plates bolted to the inside of the flasks, so that the screw can change its position in the vertical plane as it rises or falls.

The recoil is checked by means of a hydraulic buffer, which consists of a steel cylinder with a bore 5 inches in diameter and 42 inches in length. The cylinder has collars with heavy eye lugs fitted to the front and rear ends of the cylinder, and side straps are keyed to these eye lugs. The straps project beyond the front end of the cylinder and terminate in eyes. A cast-iron pintle block is securely bolted to the gun platform between the wheels.

A crosshead or yoke, carrying journals to fit the strap eyes of the recoil cylinder, is bolted to the pintle block by a single stout bolt, which forms the axis about which the crosshead is free to turn when the carriage is traversed. The bolt is secured to the pintle block by a retaining screw pin engaging in an annular groove in the bolt.

The side straps are keyed to the eye lugs and to the journals by split keys. The piston head is connected with a rod that passes through a stuffing box at the rear of the cylinder, and terminates in an eye. This eye is connected by a pin with a firing bracket bolted on the underside of the firing-bracket attachment plate of the trail. The bottom plate is cut away for a length of 29 inches and a width of 10.75 inches to permit the buffer to swing.

In traveling, the hydraulic buffer is carried under the trail, supported by brackets and pins, the forward bracket being just in rear of the axle.

The lunette is formed by reenforcing the bottom plate of the trail 81.5 inches in rear of the axle.

A ½-inch plate, with a circular offset, 5 inches in diameter, projecting ¼ of an inch from the face of the plate, is let into and bolted to the bottom plate, and the lunette hole, 2.5 inches in diameter, is bored through this plate.

Digitized by Google

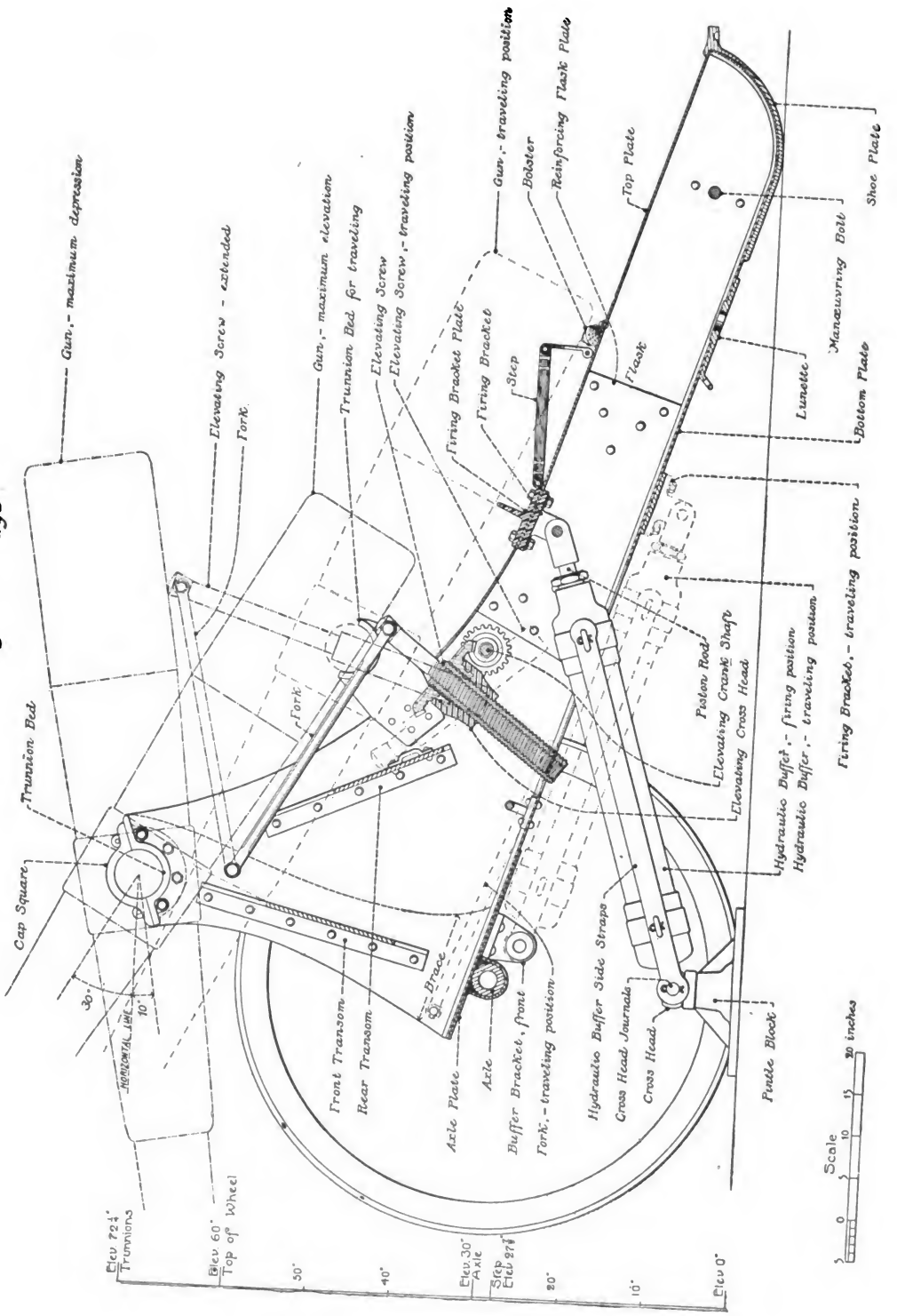

Fig. 46
5 inch B L. Siege Rifle. - Steel
Siege Carriage

Digitized by Google

Digitized by Google

Fig. 47

Siege Limber

For the 5 inch B.L. Siege Rifle & 7 inch B.L. Siege Howitzer

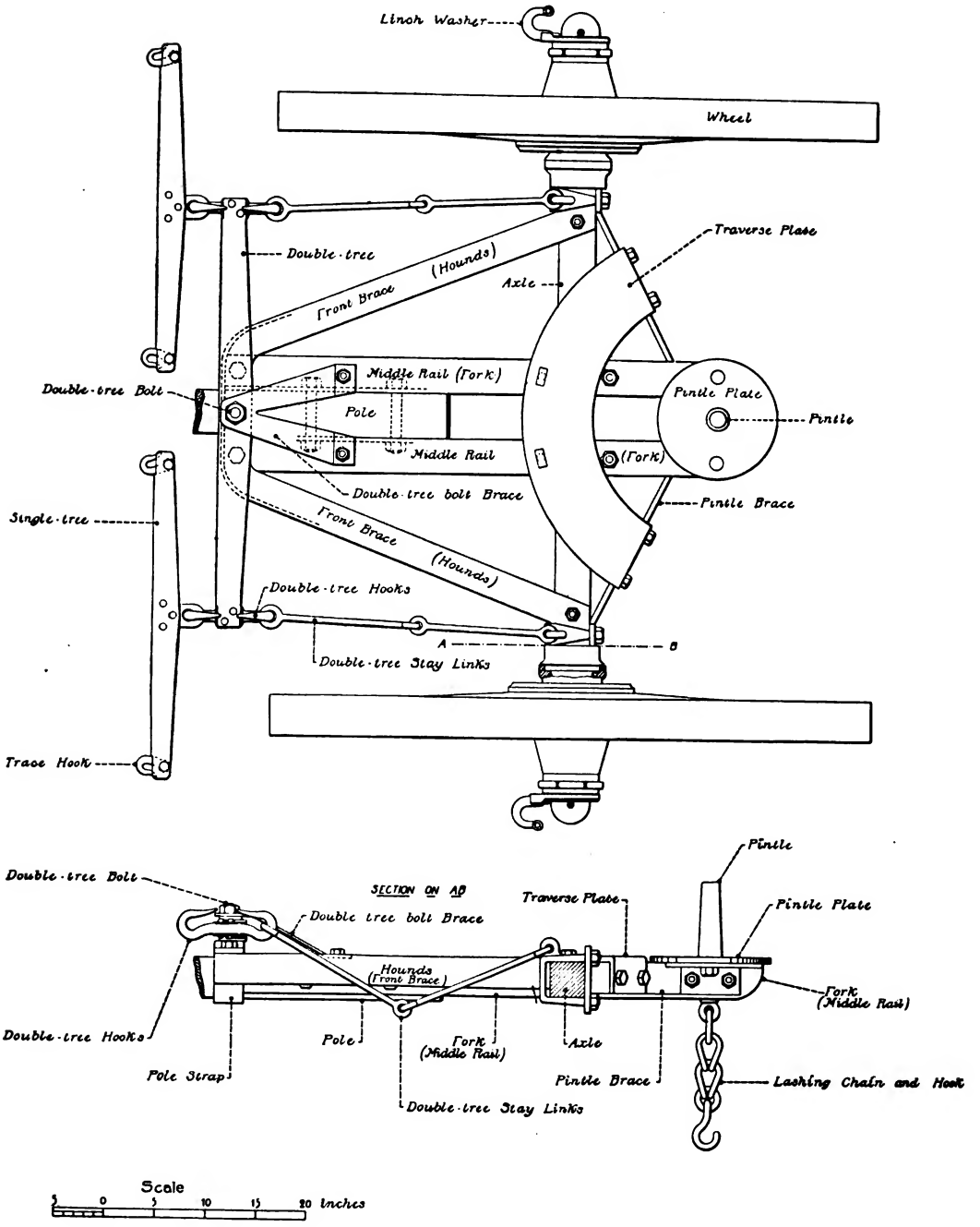

Digitized by Google

Digitized by Google

A folding step is placed in rear of the firing bracket, to which latter the rear end of the hydraulic buffer is attached. In the traveling position this step is folded flat upon the trail. The trunnion beds for traveling are placed 30 inches in rear of the trunnion beds, and are formed by stout brackets riveted to the sides of the flask. The breech of the gun rests upon a wooden support across the flask, just in rear of the step. At the forward end of the lunette is an eye, by means of which and the lashing chain and hook on the limber, the trail is secured to the latter.

The trail of this carriage has been strengthened by the addition of reenforcing plates riveted to the side plates of the flasks. These reenforcing plates nearly cover the space between the elevating-crank shaft and the bolster.

In addition to this method of strengthening the carriage, it is proposed, in future constructions, to increase the width of the side plates of the flasks. Commencing at about 10 inches in rear of the traveling trunnion, the upper line of the flask plate is to be made straight to the end of the trail, intersecting the upper line of the flask in the old construction at about the rear of the bolster or "gun rest."

These modifications necessitate a change in the position of the firing bracket. A plate, riveted to the top plate of the flask, is bent down at right angles to the direction of the pull of the hydraulic buffers, forming a support for the firing bracket. It is then again bent at right angles to the rear and riveted to the flask just forward of the bolster.

LIMBER FOR SIEGE GUNS.

The same limber is used for both the 5-inch rifle and the 7-inch howitzer. It is simply a rolling support for the trail of the carriage in traveling, and has no other office. It consists of a framework of angle steel, resting on a solid forged axle 3½ inches square, with wheels of the Archibald pattern, 5 feet in diameter. The middle rail is made up of two 3½-inch steel angles ⅜ inch thick. The lower flanges are cut away for the axle, and the upper flange is let in flush with the top surface of the axle. Steel straps pass under the axle, and are bolted to the middle rail by four bolts, two in each part. One of these bolts in each strap is secured by a nut, and the other has a square head which is countersunk in the upper surface of the traverse circle to attach it to the middle rail.

The front brace for the middle rail is made of 3-inch angle steel ⅜ inch thick. It is a single piece bolted to the middle rail at the pole end and spreading diagonally so that its extremities rest upon, and are bolted to, the axle just inside of the shoulder washers. The vertical web is partly cut away and bent outward and is secured by a strap which embraces the axle, and forms an eye for the doubletree-stay links and a support for one end of the pintle braces. The pintle plate rests upon the middle rail in such a position as to bring the pintle 14 inches from the axle. It is 12 inches in diameter, made of ½-inch steel, and is solidly bolted to the horizontal web of the middle rail. The pintle is the frustum of a cone 2.375 inches in diameter at the plate, with a slight taper.

Below the pintle, and screwed into it axially, is an eyebolt, which supports the lashing chain and hook. When hooked into an eye on the carriage, just in front of the lunette, this chain limits the vertical motion of the trail in the traveling position.

The traverse circle is a steel plate over the axle, ½ inch thick and 7 inches wide, flanged at the ends and bolted to the pintle braces and secured to the middle rail as already stated. It supports the weight of the trail in conjunction with the pintle plate, and corresponds to the fifth wheel of a wagon.

The pole is of wood, 10 feet 11¼ inches in length, squared to 4½ inches, so as to enter its seat in the middle rail. It is bolted in place by two 1-inch bolts. It is sheathed with copper from a point 33 inches from its end for a distance of 2 feet back. The doubletrees and

Digitized by Google

singletrees are of steel. The former is pivoted on the doubletree bolt, which rises above the front connection of the middle rail and is braced back to the same by a forked steel brace called the doubletree-bolt brace. At the extremities of the doubletrees are double hooks, the front branches to hold the singletrees and the rear to engage the stay links, which form a connection with the axle and limit the motion of the doubletree about its pivot.

THE 7-INCH B. L. R. SIEGE HOWITZER.

This gun is also intended to form a part of the siege train. Its weight (3,750 pounds) is not too great for transportation over ordinary roads and pontoon bridges. It is made heavier than is actually necessary for strength in order that the surplus metal may reduce the shock on the carriage.

It is made of steel and consists of a tube, jacket, trunnion band, sleeve, locking ring, key ring, base ring, and breech mechanism

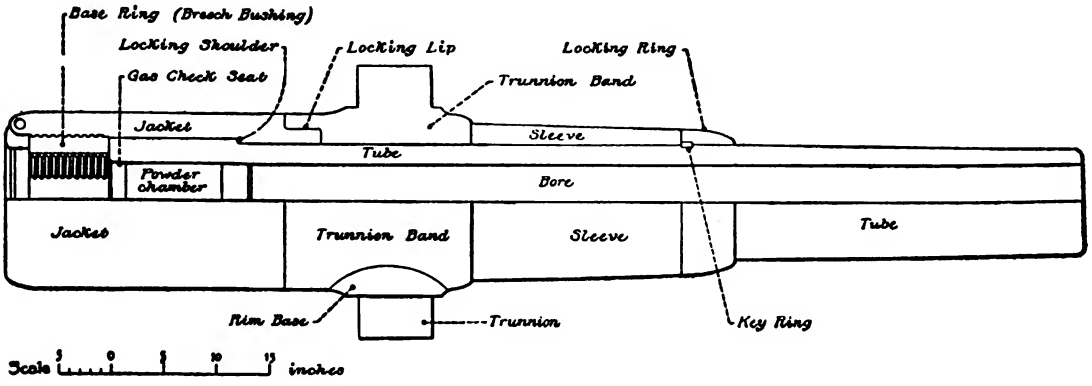

Fig. 48. 7-inch Breech-loading Rifle Howitzer.

The tube is 92.5 inches in length and varies in exterior diameter from 11.677 inches at the breech to 10 inches at the muzzle. The jacket is cylindrical on the exterior, 29.8755 inches long and 16.50 inches in diameter. It is shrunk on the tube and abuts against a shoulder just in front of the powder chamber. At the forward end of the jacket is a locking lip, over which the trunnion band laps when shrunk on the tube. The trunnion band is forged with the rimbases and trunnions on, and is 17.47 inches in length. In front of the trunnion band, and abutting against it, is the sleeve, which is 25 inches long, and is shrunk on the tube.

In front of the sleeve a groove is cut around the tube to receive the key ring, which is divided diametrically into two parts and set in the groove. The locking ring, with a shoulder for the key ring, is then shrunk on, fastening the whole system together. The tube projects 33 inches beyond the locking ring.

The breech bushing, which sustains the longitudinal thrust transmitted to it by the breechblock, is screwed into the jacket and is slotted and threaded on its interior surface to correspond with the breechblock.

The breech mechanism is nearly the same as that of the 5-inch rifle. The lever handle, instead of being curved around the vent, is made straight, but is broadened opposite the vent and has a circular hole through it of slightly greater diameter than the diagonal of the hexagonal obturating nut. The rear of the breechblock also has a plate dovetailed upon it and fastened by four screws. This plate, called the face plate, carries the lugs for the lever

Digitized by Google

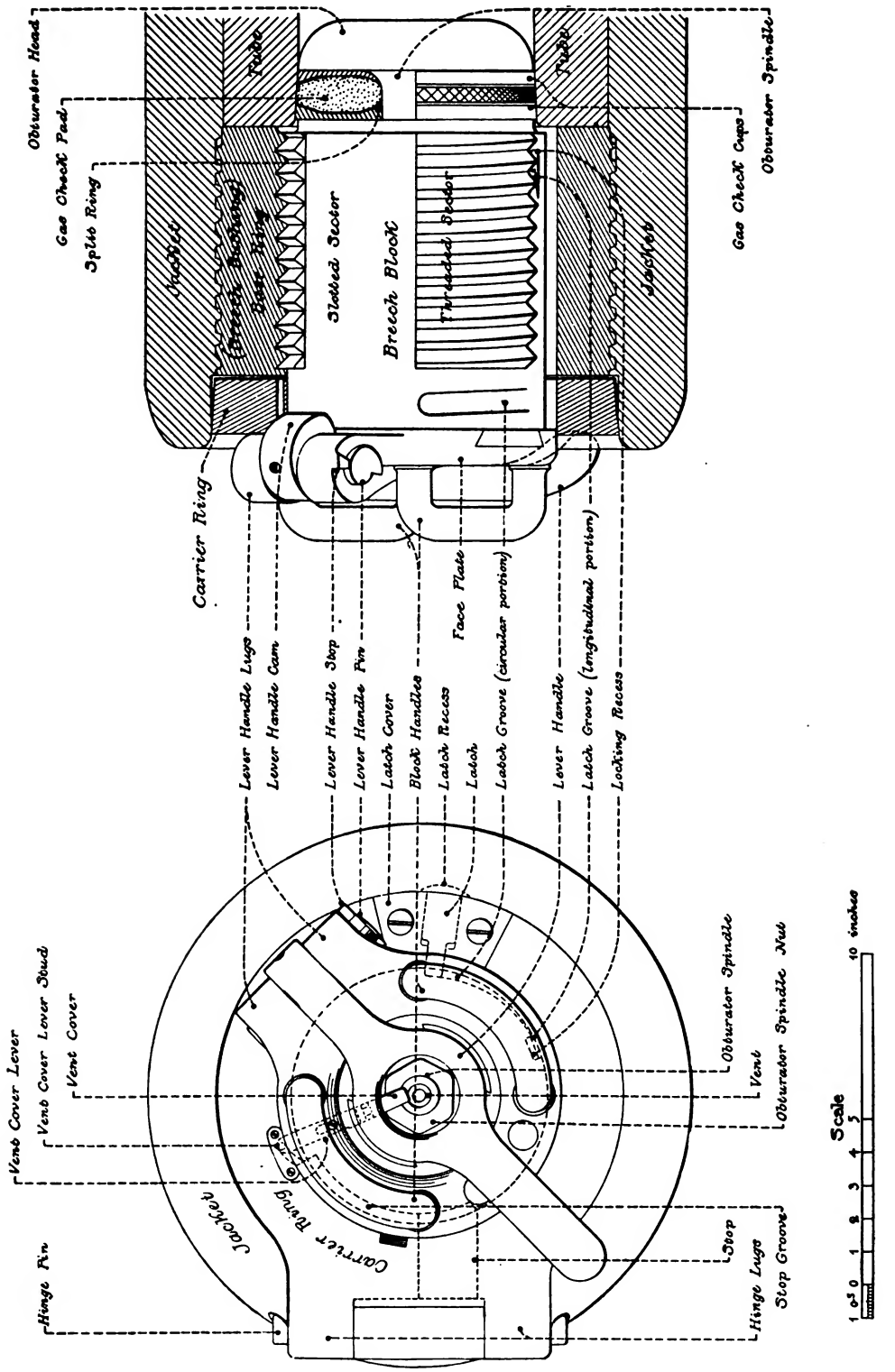

Fig. 49
7 inch B.L. Rifled Siege Howitzer. – Steel
Breech Mechanism
Locked, Ready for Firing

Digitized by Google

Fig. 50

7 inch B.L. Rifled Siege Howitzer.—Steel

Siege Carriage

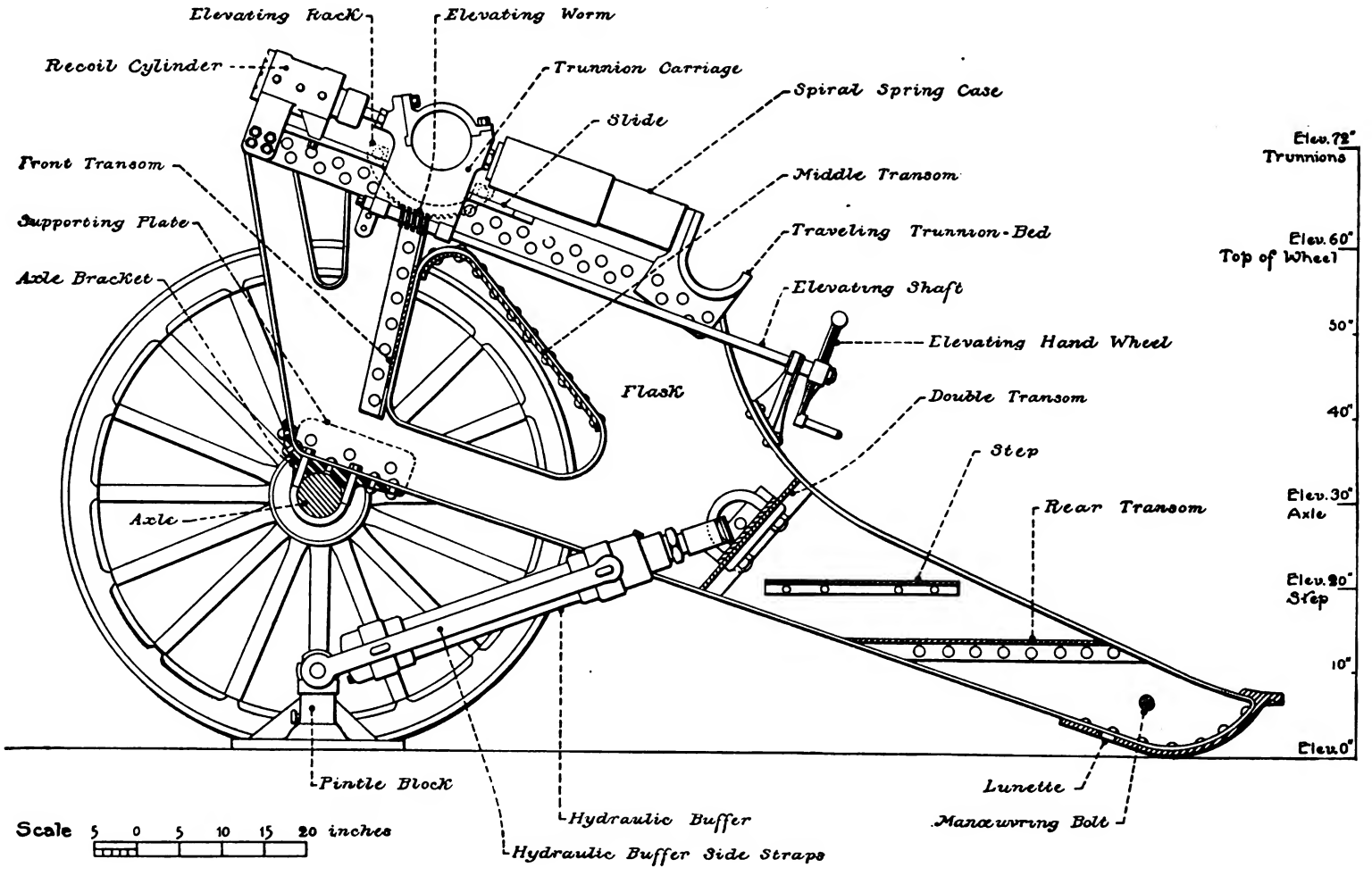

Digitized by Google

Digitized by Google

handle, and also the block handles, of which there are two instead of one, as in the guns of smaller caliber. These handles are riveted to the breech plate.

The action of the breechblock and dependent parts is precisely the same as in the 5-inch rifle.

The principal weights, dimensions, etc., are as follows:

Weight	pounds	3,710
Total length	feet	8.475
Length of bore	calibers	12.67
Maximum diameter of breech	inches	16.7
Diameter of muzzle	do	10
Diameter of trunnions	do	7
Length of trunnions	do	4
Distance between rimbases	do	18
Distance of axis of trunnions from muzzle	do	64.87
Rifling:		
Number of grooves		42
Width of grooves	inches	0.3736
Depth of grooves	do	0.05
Width of lands	do	0.15
Twist of rifling	calibers	1 in 50 to 1 in 25
Powder chamber:		
Diameter	inches	7.2
Length	do	7.465
Capacity	cubic inches	315.7
Total capacity of bore	do	3,520.1
Powder charge:		
Kind of powder		IK Granular.
Weight of charge	pounds	10
Density of loading		0.8768
Projectile:		
Weight of projectile (filled)	pounds	105
Ratio of weight to weight of piece		$\frac{1}{35}$
Weight of bursting charge	pounds	9.8
Length of projectile	calibers	3
Sectional density $=\frac{W}{d^2}$		2.1428
Travel of projectile, in bore	calibers	11.61
Muzzle velocity	foot-seconds	1,085
Pressure per square inch in powder chamber	pounds	28,224
Muzzle energy	foot-tons	856.9
Penetration in steel at—		
Muzzle	inches	3.8
1,000 yards	do	3.2
2,500 yards	do	2.7
3,500 yards	do	2.4
Forgings:		
Total weight	pounds	5,722
Weight of tube	do	2,225
Weight of jacket	do	1,224

CARRIAGE FOR THE 7-INCH B. L. R. SIEGE HOWITZER.

This carriage is a built-up construction of rolled-steel plate, mounted upon an axle and wheels. The principal feature of the carriage is the method of taking up the recoil.

Digitized by Google

The howitzer is mounted upon two trunnion carriages which move upon inclined slides. These slides are pieces of double T iron, placed over the upper edges of the cheeks or flasks, and riveted to them by ¾-inch rivets. They are inclined downward to the rear at an angle of 20 degrees to the horizontal. The recoil of the piece upon the slides is checked by two hydraulic cylinders of forged steel and spiral springs. The latter also serve to return the piece to the firing position. They rest against the bronze traveling trunnion beds and are inclosed in telescoping tubes. The limit of recoil of the trunnion carriages is 6 inches.

The flasks are of rolled-steel plate, ½ inch thick, and flanged inward, except at their upper edges, the flanges being 2½ inches wide. From each flask there are cut two triangular pieces in order to diminish the weight. The smaller of the apertures thus formed is in front of the axle, while the larger is in rear, and the edges of the latter are turned inward for stiffness.

The flasks are united by three transoms of ½-inch steel and a double transom, to which is fastened the piston rod of the hydraulic brake. The forward ends of the flasks rest on the axle through the medium of two iron forgings, the flasks being strengthened at these points by two supporting plates. The axle is of solid steel. The wheels are of the Archibald type, 60 inches in diameter, and weigh 335½ pounds each.

In addition to the recoil cylinders, which control the motion of the trunnion carriages, a hydraulic buffer, to further check the recoil, is placed under the carriage. A cast-iron pintle block is firmly bolted to the gun platform between the wheels. In this is a vertical bolt, free to revolve in traversing with a crosshead, to which the hydraulic cylinder is attached by side straps. The piston rod is fastened, as already stated, to the double transom of the trail. Both this cylinder and those in front of the trunnion carriages have bars of varying cross sections for changing the size of the orifices for the flow of the liquid, so as to make their resistance uniform.

A bronze elevating rack is attached to the piece, and the elevation is given by means of a worm with a shaft and handwheel. This worm is held by two projections cast on the right trunnion carriage. The worm, in recoiling with the piece, slides along a shaft, which is splined for the purpose. The elevation can be varied from 40 to 45 degrees.

The same limber is used for this carriage as for the 5-inch rifle. The trail terminates in a forged-steel shoe plate, and the lunette is a separate plate on the underside of the trail in front of the trail shoe. Maneuvering bolts project from the sides of the trail, the flasks being stiffened at these points by supporting plates.

A projection from the rear of the shoe plate affords a point of application for the end of a roller handspike.

The weight of the carriage, complete, including wheels, hydraulic buffer, and pintle block, is about 3,200 pounds. The axis of the trunnions is 72 inches above the platform, and the distance between the points of support at the wheels and at the trail is 100 inches.

7-INCH B. L. R. SIEGE MORTAR.

The 7-inch mortar is intended to be used in siege operations for the purpose of bringing to bear a vertical fire upon strongly intrenched and covered positions. It is used to supplement the curved fire of the siege howitzer by a vertical fire of medium ranges and to cover the field at shorter ranges than are accessible to the fire of the howitzer.

This mortar is constructed entirely of steel, the body, including the trunnions, being made of a single forging.

The breech mechanism is similar to that of the 3.6-inch field mortar, except the form of vent closer and gas check.

Digitized by Google

Fig. 52

7 inch B.L. Rifled Siege Mortar.– Steel

Breech Mechanism

LOCKED, READY FOR FIRING

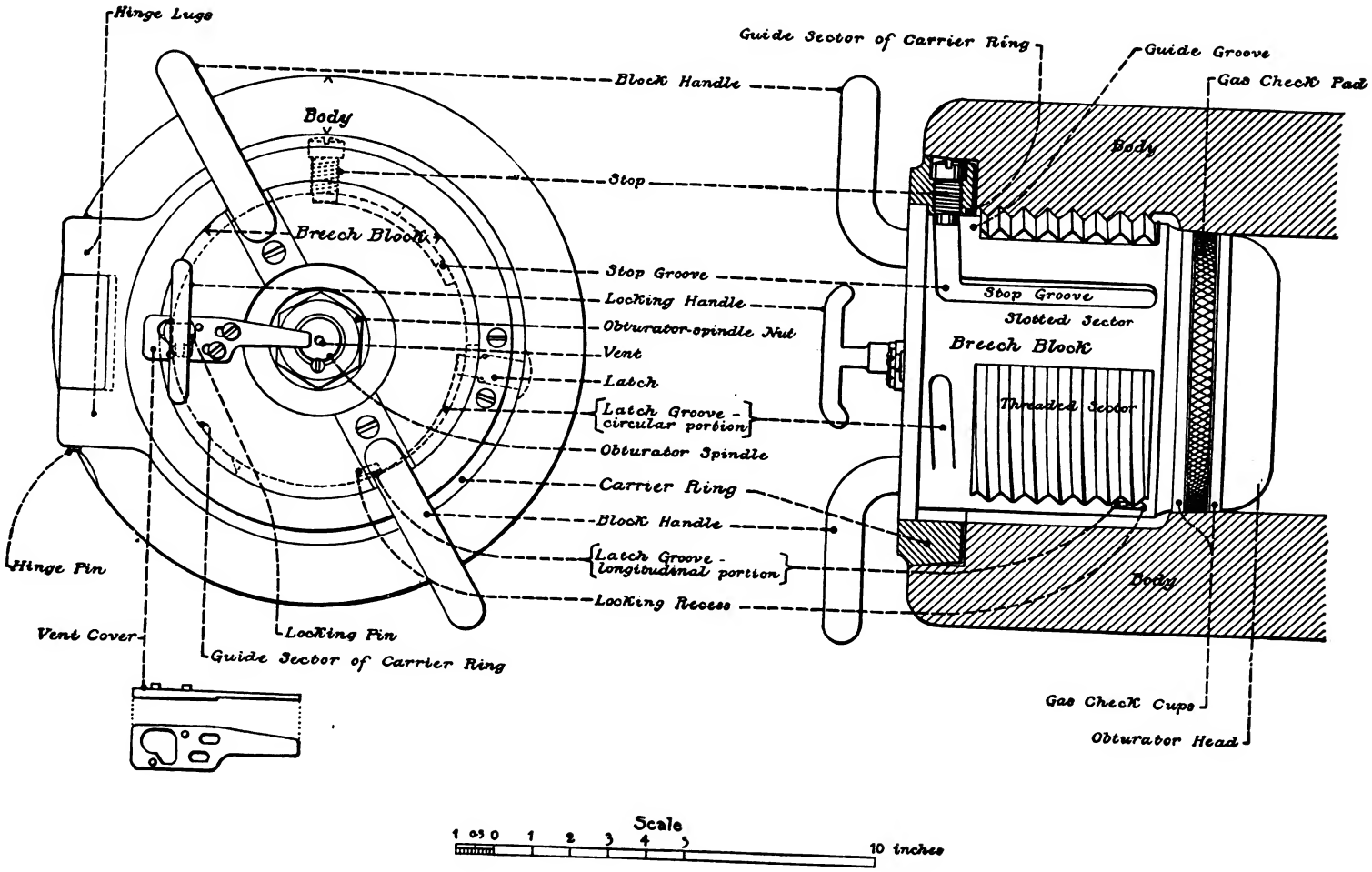

Digitized by Google

Digitized by Google

The breechblock is turned by fixed handles, which are dovetailed into the rear of the breechblock and fastened by a single screw each. The block is locked by means of a pin set in its periphery, part of which is sheared off. The action is that of a stay pin inserted in a hole made partly in each of two closely fitting cylinders to prevent the inner one from turning. When unlocked the pin has the part cut away outward, but upon being turned

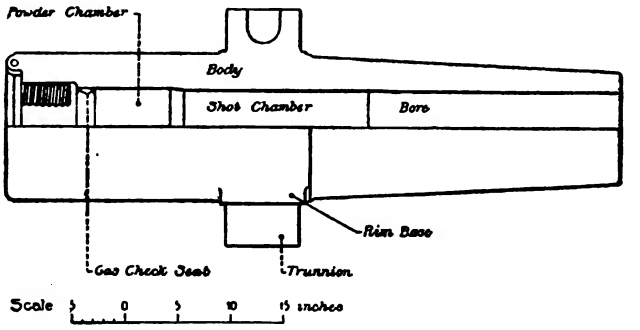

Fig. 51. 7-inch Breech-loading Rifle Mortar.

the full diameter of the pin engages in a corresponding cavity in the carrier ring, firmly locking the two surfaces together. The locking pin is turned by means of a winged handle and is held in place by two screws with round points engaging in a groove around the pin. This pin also operates the vent cover. Outside of the breechblock it has a cam which moves in a peculiarly shaped slot in the vent cover, so that when the pin is turned so as to lock the block the cover is drawn back by the cam, exposing the vent. When the pin is turned so as to unlock the block, the vent cover is pushed over the vent by the same cam. Two pins, screwed into the rear of the breechblock, guide the vent cover so that it can only move in the direction of a radius of the rear surface of the block.

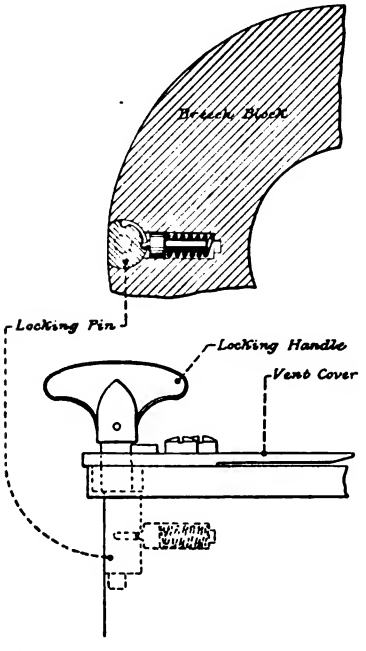

Fig 52a. Locking Pin for 7-inch Breech-loading Rifle Mortar.

In the latest modification of this gun a wing nut, like that adopted for the 3.6-inch mortar, has been substituted for the winged handle shown on the drawing, and described above.

A small bolt has also been set into the breechblock to hold the locking pin in either of its two positions. A groove is cut about a quarter of the way around the pin with a slight well at each end. The bolt, under the tension of a spiral spring, pushes its point into the groove, and when in either of the wells a slight exertion on the wing nut is necessary to turn it.

The breechblock is hollowed out at the rear for the obturator nut, which is hexagonal.

The obturation is accomplished by means of the plastic pad used in all field and siege cannon except the 3.6-inch mortar.

This mortar is adapted for the same projectiles as are used in the 7-inch howitzer. It has a muzzle velocity of only about 700 feet per second, and it is probable that a long steel shell charged with high explosives, weighing 150 pounds, will also be used.

Digitized by Google

The principal weights, dimensions, etc., of the 7-inch B. L. R. mortar are as follows:

Weight	pounds	1,715
Total length	feet	4.86
Length of bore	calibers	7
Maximum diameter of breech	inches	13.8
Diameter of muzzle	do	10.5
Diameter of trunnions	do	7
Length of trunnions	do	4
Distance between rimbases	do	14.3
Distance of axis of trunnions from muzzle	do	34.15
Rifling:		
Number of grooves		28
Width of grooves	inches	0.6354
Depth of grooves	do	0.055
Width of lands	do	0.150
Twist of rifling	calibers	1 in 40 to 1 in 15
Powder chamber:		
Diameter	inches	7.25
Length	do	4.18
Capacity	cubic inches	182.8
Total capacity of bore	do	1,950.9
Powder charge:		
Kind of powder		IB Sphero-hex.
Weight of charge	pounds	5.5
Density of loading		0.8328
Projectile:		
Weight of projectile (filled)	pounds	125
Ratio of weight to weight of piece		$\frac{1}{13}$
Weight of bursting charge	pounds	12.5
Length of projectile	calibers	3.6
Sectional density $= \frac{W}{d^2}$		2.1428
Travel of projectile, in bore	calibers	6.40
Muzzle velocity	foot-seconds	690
Pressure per square inch in powder chamber	pounds	18,000
Muzzle energy	foot-tons	412.5
Penetration in steel at muzzle	inches	2.2
Forgings:		
Total weight	pounds	2,206
Weight of tube	do	1,982

THE CARRIAGE FOR THE 7-INCH B. L. R. SIEGE MORTAR.

This carriage consists of two cheek pieces of ½-inch rolled steel of the general form of a right-angle triangle, connected by three steel transoms. One of these transoms is placed at the front of the carriage; the second extends from a point just forward of the trunnions to the bottom of the carriage at the front, and is perpendicular to the top line of the carriage; the third extends diagonally to the rear from the same point to the base of the carriage, making an angle with it of about 60 degrees. The three sections into which the sidepieces are divided by these transoms have triangular pieces cut out of them to lighten the carriage. The opening in the center section has its edges turned in to increase the stiffness of the cheek.

Digitized by Google

Fig. 53
7 inch B.L. Rifled Mortar
Siege Carriage

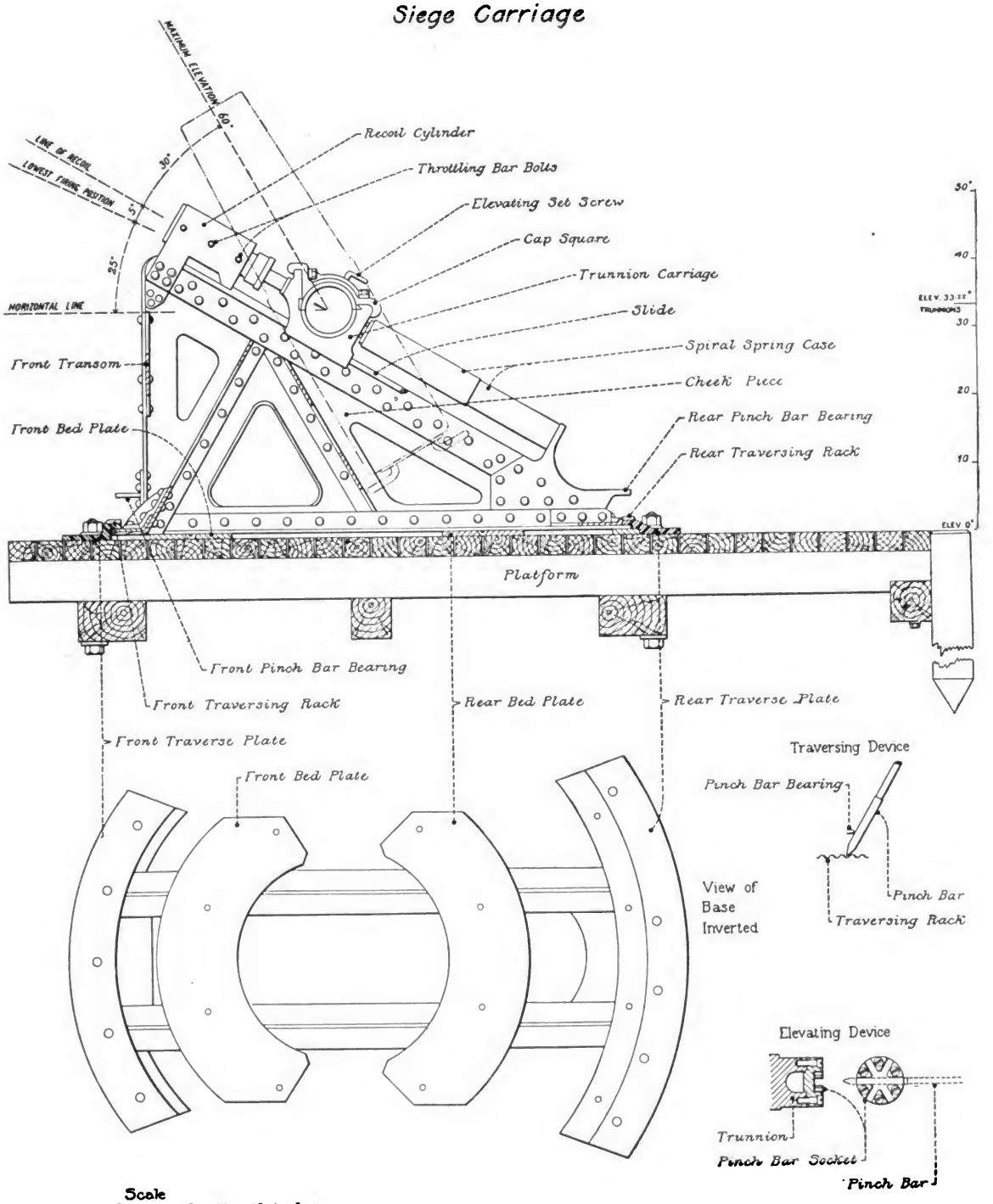

Digitized by Google

Digitized by Google

The mortar is mounted upon two trunnion carriages, which move upon slides inclined to the rear at an angle of 30 degrees from the horizontal. These slides are of double T iron, 3 inches on the top surface and 4 inches on the side, and embrace the upper edges of the cheeks and are riveted through them. In front of the trunnion carriages are the hydraulic cylinders that serve to check the recoil. These cylinders are 15 inches in length and 5½ inches in diameter, and allow a recoil of 8 inches. The piston rods are attached to the trunnion carriages, and two throttling plugs in each cylinder are used to regulate the resistance to recoil. In rear of the trunnion carriages are cylindrical cases, 32 inches in length, containing spiral springs, which are compressed by the trunnion carriages when the piece is fired, assisting in taking up the recoil and serving to return the mortar to the firing position.

The maximum elevation that can be given to the mortar is 60 degrees, and the minimum 25 degrees. A set screw through the trunnion cap-square is used to hold the mortar after the elevation has been given. On each trunnion is a device for elevating and depressing the mortar, consisting of a circular piece of wrought iron bolted on the face of the trunnion. In this plate are three grooves intersecting at the center, through which the pinch bar can be thrust to turn the piece in the trunnion beds.

The bottom edges of the cheeks are riveted between two angle irons 2 x 2½ inches, so as to form a base for the carriage. At both the front and rear of the carriage are pinch-bar bearings for traversing, the point of the bar engaging in teeth in circular racks on the trunnion plates. The carriage rests upon two bedplates. The base of the carriage is connected, both front and rear, by horizontal transom plates 6 inches wide. The projecting edges of these plates are circular and fit into corresponding circular recesses formed by the traverse plates. These plates act as guides for the carriage in traversing, so that it is compelled to move about a fixed center immediately under the axis of the trunnions.

The carriage is mounted upon and firmly bolted to a wooden platform 11 feet long by 6 feet wide, which is embedded in the earth and sustained at the rear by anchor stakes.

The height of the axis of the trunnion is 33.22 inches above the platform, and it is placed 27½ inches in rear of the front of the carriage. The total length of the carriage is 76.625 inches.

Digitized by Google

Digitized by Google

CHAPTER VI.

SEACOAST CANNON (8, 10, AND 12 INCH) AND CARRIAGES.

The modern seacoast cannon thus far adopted for the United States service are the 8, 10, and 12 inch B. L. rifles, and the 12-inch B. L. rifled mortar. In addition to these, some form of heavy rapid-fire gun will probably be adopted for sweeping mine fields and protecting shore batteries against possible land atacks. The caliber at present under trial for this purpose is 12 centimeters (4.724 inches), using a projectile weighing 45 pounds, propelled by smokeless powder. These guns will probably be placed on nonrecoil mounts, protected by steel shields, or on some form of mount that can be raised for firing and lowered under cover when not in action.

THE 8-INCH B. L. RIFLE.

This gun is composed entirely of steel and consists of a tube, jacket, breech bushing, "A," "C," and "D" hoops, and breech mechanism. It is made by breech insertion, with a shoulder on the tube abutting against one in front of it on the interior of the jacket. The block recess is cut on the interior surface of a breech bushing, which is screwed into the breech end of the jacket, compressing a copper packing ring against the end of the tube. The breech bushing is secured against unscrewing by four stay screws halved into it and the jacket.

The number of hoops has been successively reduced as steel manufacturers have become able to make larger forgings. In the model of 1888 proper there are five A, two D, and six C hoops; in the model of 1888, M. I., there are five A, two D, and five C hoops; and in the model of 1888, M. II., there are only four A, one D, and two C hoops.

The breech mechanism consists of the breechblock, obturator, breech plate, rotating crank and gear, vent closer, tray, translating roller, translating crank, tray latch, securing latch, and hinge pin.

The principal parts of the breechblock are the three threaded sectors, three slotted sectors, two guide grooves, vent cover, translating stud, and in a few guns of the model of 1888 two handles.

The block is threaded with a V thread with rounded top. The rear portion is left unthreaded to prevent the entrance of dust. The threaded portion is divided into six equal segments, three threaded and three slotted, as in the field and siege guns. The two guide grooves are cut in the bottom slotted sector, 30 degrees each side of the lowest element of the unlocked block. They fit upon and pass over the rails of the tray when the block is drawn to the rear. In guns having them, the two handles are cut out of the solid metal. In later models the handles are omitted, and the block is slotted across its breech face for a rotating lever, which may be attached by two screw bolts.

The vent cover is a steel arm mounted in a mortise in the block and suspended on the vent-cover screw. It is constrained by a shoulder in the bronze bushing, which is stationary in the breech plate, to move when the block is rotated so as to cover the vent, over which it remains until the block is returned to its locked position. The translating stud, attached to

Digitized by Google

the rear face of the block in a slotted seat by a screw, projects radially from the face of the block. When the latter is rotated the 60 degrees necessary to unlock it the stud revolves into the groove in the translating roller.

The obturator consists of the mushroom head and stem, gas-check pad, front and rear exterior split rings, interior split ring, filling-in disk, obturator-spindle nut and locking nut, and the obturator-spindle washers.

The mushroom head and stem are similar in construction to those of the field and siege guns, except that there are two threads, one right-hand and one left-hand, on the rear end of the spindle for the obturator nuts.

The vent is drilled through the spindle, in the front of which there is a copper bushing plug forced into an undercut on the face of the mushroom head. In passing through this plug the vent contracts from .2 to .1 of an inch. This bushing may be replaced when badly eroded. The rear end of the vent channel is elongated and threaded for an obturating primer used to ignite the charge.

The pad is similar in construction to that used in smaller guns.

The exterior split rings are of steel, split diagonally through one side. They are slightly larger than the conical seat, and are sprung together in being forced into place. The interior ring is of similar construction, but slightly smaller than the spindle. The rear filling-in disk acts as a washer in rear of the pad. A shoulder on its front face supports the interior edge of the rear split ring, and a fillet on the rear face of the mushroom head performs the same office for the front split ring. The obturator-spindle nut is screwed on the rear end of the stem with a right-hand thread. It draws the obturator head and gas check to a bearing against the face of the block. It abuts against the spindle washers, and has, under its front edge, a thin, steel-spring washer, designed to give a slightly yielding bearing for the nut to reduce the shock on it, and to enable the block to be turned through the sixth of a turn in unlocking without withdrawing the gas check. In rear of the spindle nut is a locking nut, screwed on with a left-hand thread, designed to prevent the spindle nut from unscrewing.

The four obturator spindle washers are alternately bronze and steel. They reduce the friction between the spindle nut and the rear face of the block recess, enabling the block to be rotated independently of the gas check, leaving the latter in its seat until the block is unlocked. They are assembled with a bronze washer in front and the others alternating steel and bronze.

The breech plate is a steel casting attached to the breech face by twelve large screw bolts. Its function is to cover the rotating gears and connect the tray with the gun by means of the hinge pin. On it are mounted the rotating gears and their journals, the gear segment actuated by them, the bronze bushing seat of the gear segment, and the securing latch. On its rear surface are the hinge-pin ears and rear-sight seat. A recess in its face acts as a catch for the tray latch.

The bronze bushing for the gear segment is attached to the plate by four screw bolts in a recess in its front face. It supports the gear segment in rear and on its outer surface. It is lubricated by oil channels in its face.

The rotating crank and gears are the means of unlocking the block. They consist of the gear segment, rotating pinion, and the rotating crank and associate parts.

The steel gear ring encircles the breechblock and is mounted in the bronze bushing. From this ring projects radially the gear segment of 70 degrees, in which gear teeth are cut. The gear ring fits over the cylindrical portion of the block, with a lug extending inward into the upper right-hand slotted sector, prolonged to the rear to receive it. It acts as a key in this slot to constrain the block to rotate. When the latter is withdrawn from the screw box, the slotted sector slides from under the lug.

Digitized by Google

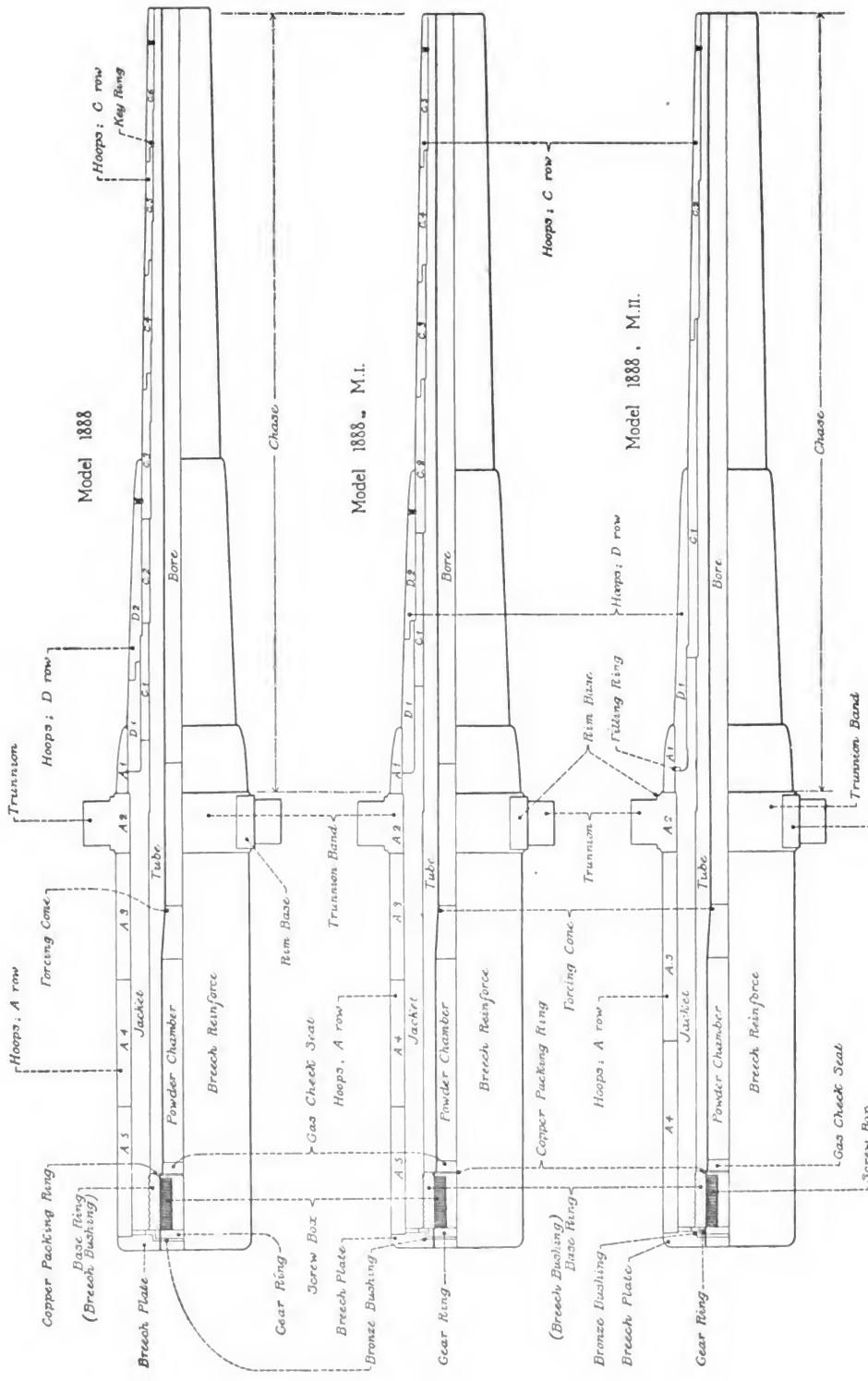

Fig. 54
8 inch B.L. Rifles. – Steel, 14½ tons

Digitized by Google

Digitized by Google

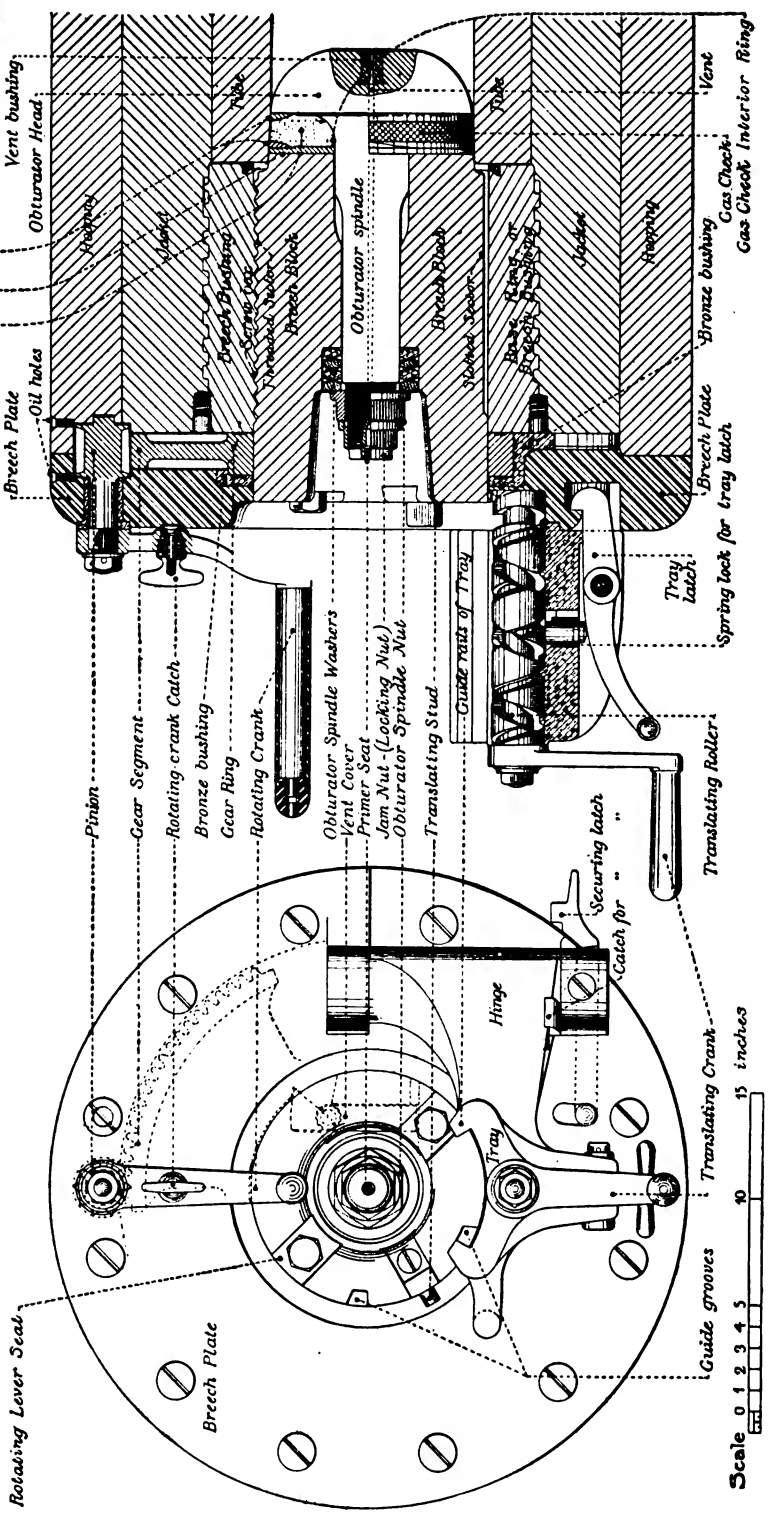

Fig. 55
8 inch B.L. Rifle. - Steel, 14 ½ tons
Model 1888 Modified

Digitized by Google

Digitized by Google

The pinion is a small gear whose function is to rotate the gear segment, into which it meshes. Its journal, mounted in a bronze sleeve seated in the upper arch of the breech plate, extends to the rear beyond the face of the breech plate, and has the rotating crank mounted upon its squared end, secured by a nut and stay pin. By it the pinion is turned, which rotates the gear segment, and in turn the block. Over the two faces of the pinion there are oil holes, closed by screws, for the lubrication of the rotating gears.

There is a spring catch mounted in the face of the crank arm, by which the gear system is locked when the breech is closed and the block rotated to its firing position. This catch consists of a bolt, a spiral spring, a housing nut, and a winged nut. The bolt is seated with its head projecting to the front through the crank arm. Its forward end is beveled on one side and squared on the other. It is held in bearing against its seat by a spiral spring on its back, compressed by the housing nut screwed over it. The rear end of the bolt is threaded and has a winged nut mounted upon it, having a projecting lug on one side. When the nut is revolved 180 degrees, so that the bolt presents its beveled side in the direction of rotation, the crank may be revolved, carrying the gear segment to either of its extreme positions. The handle of the rotating crank is covered with a loose sleeve to facilitate turning.

By the rotation of the block the translating stud is revolved into the thread of the translating roller and the block is in position to be drawn directly to the rear out of the breech recess into the tray.

The tray is of bronze mounted in rear of the breech, supported by a hinge pin on the right-hand side, in ears cut in the breech plate. The parts are the tray proper, the translating roller and crank, the tray latch, and the catch for the securing latch.

The translating roller is seated in a right-hand thread in the upper surface of the body of the tray. It has two independent threads cut in opposite directions on its surface. The translating stud engages in the left-hand thread in the roller. The translating crank is mounted on the squared end of the roller. The rotation of this crank causes the roller to unscrew in its right-hand thread, and hence travel back in the tray, drawing the block with it. It also causes the translating stud attached to the block to travel as a nut in the left-hand thread. Thus a double motion of translation is given to the block, drawing it into the tray by fewer revolutions of the crank than if either were used singly. In the reverse motion the tray latch serves to secure the tray to the face of the breech in entering the block into its seat in the screw box. It is mounted in a longitudinal slot in the web on the underside of the tray on a latch bolt. Its front end terminates in a hook lip, which engages in a catch seat recessed in the breech plate. On its rear end is a transverse handle. A spring bolt, mounted in the tray above the latch, holds it so that it can not be unlatched so long as its bolt is covered by the translating roller. When the latter is quickly withdrawn beyond it, the relation between the excess of weight in front of the latch journal and the tension of the bolt spring is such that the jar will unlatch it.

The tray may then be swung about its hinge pin until caught by the securing latch, thus uncovering the screw box. The securing latch is mounted in a recess in the breech plate, through which its handle protrudes on the left and its catch end on the right. Its pivot is a screw bolt passing through the lower hinge ear, hinge pin, and breech plate. Its latch lip engages in a catch on the diagonal web of the tray. It may be released by lifting the handle or pressing down the latch end.

The hinge pin is a cylindrical bar mounted in two ears on the right side of the breech plate. An oil hole in the upper hinge ear permits of the pin being lubricated. It is entered from below and held in position by the same screw bolt upon which the securing latch is pivoted.

Digitized by Google

The action of the breech mechanism is as follows:

When the block is in position for firing, the block threads are in bearing with those in the block recess; the rotating crank is vertical; the winged nut of the spring catch is turned so that the square end of the bolt is in bearings in its recess; the upper end of the vent cover is in its recess in the bronze bushing, and its lower end is clear of the vent. The translating stud is 60 degrees to the left of its seat in the roller; the tray latch is engaged in its catch; the gear segment is rotated to its extreme right-hand position and the gas check is in its seat.

To open the breech: Turn the winged nut 180 degrees; seize the rotating crank handle with both hands, left in front, back of the left hand down, back of the right hand up; turn the crank one and three-fourths turns to the left in the direction of the hands of a clock, as indicated by the arrow marked "open" on the breech plate, until the translating stud turns into the translating-roller thread; the spring catch will be opposite the breech-plate assembling screw with a recess in its head to receive it, and the guide grooves in the lock opposite the guide rails of the tray. Seize the translating crank in the same manner and turn from right to left three turns, ending with a quick motion to bring the block into its final position in the tray with a jar which will release the tray latch. Catch the tray handle in the left hand, back of the hand down, and swing the tray about the hinge pin till the securing latch engages in the catch.

To close the breech: Release the securing latch by the left hand; swing the tray to the face of the breech, reverse the motion of the translating crank, then that of the spring bolt, and that of the rotating crank.

Care should be had that the parts are kept free of dirt and residue, and that they are kept well oiled. After firing, the gun should be washed out and then lubricated with vaseline. During firing the pad should be frequently oiled, and the residue removed from the chamber. The projectile should never be entered without first placing the loading tray in the block recess. All projectiles should be wiped free of sand or dirt before loading. Before each day's firing the mechanism should be oiled through the holes marked "oil hole." The pressure-plug seats should be closed either with the dummy plugs or pressure plugs. Pressure should always be taken when possible. In making up reduced charges the cartridges should be made of the standard full length, the reduction being made in diameter. The gun should be habitually kept, when not in use, with the muzzle slightly elevated and with tompion and breech cover in place. The breechblock and tray and associate parts should be removed from the gun when long intervals occur between firings. A suitable chest is provided by the Ordnance Department for this purpose. If a gas-check pad is torn or burned in firing it should be replaced. If there is not time to secure a new one from an arsenal it may be repaired by warming it slightly and pressing back the asbestus and tallow mixture and sewing a piece of light canvas over the rent. It will be formed to shape in firing. Care should be had that the obturator nut and check nut are always screwed up so that there is enough friction to make a slight effort necessary to turn the obturator in its seat. If, after firing, the block can not be unlocked by the rotating crank, put on the rotating lever and endeavor to turn the block. If this fail, remove the obturator nuts and washers and unscrew the block, leaving the obturator in the gun. If the block can not be unscrewed, remove the tray and breech plate. Support the tray by blocking and take out the hinge-pin bolt and remove the hinge pin and tray. Then support the breech plate by blocking and turn out the breech-plate screws, loosening all before any are entirely removed. Take out the top one and the side ones last. To avoid marring the thread, let one man hold a heavy screw-driver in the slot, and a second turn its blade with a screw wrench, catching the blade near the screw head. Put on the block-lever handle and unscrew the block. The breech plate should not be taken

Digitized by Google

off unless it be absolutely necessary. Its parts should always be well oiled. If it should be found necessary to remove it, an eyebolt, which screws into the oil hole, is provided for conveniently handling it. If the block can be unlocked but not drawn back, aid the translating roller by gentle ramming on the face of the obturator, interposing a hard-wood block between the rammer and the obturator.

A history of each round fired should be kept with each gun.

The principal weights, dimensions, etc., of the 8-inch B. L. rifle, are as follows:

Weight	pounds	32,480
Weight	tons	14.5
Total length	feet	23.21
Length of bore	calibers	32
Maximum diameter of breech	inches	30
Diameter of muzzle	do	14
Diameter of trunnions	do	10
Length of trunnions	do	6
Distance between rimbases	do	32.5
Distance of axis of trunnions from muzzle	do	183
Rifling:		
Number of grooves		48
Width of grooves	inch	0.3736
Depth of grooves	do	0.06
Width of lands	do	0.150
Twist of rifling	calibers	1 in 50 to 1 in 25
Powder chamber:		
Diameter	inches	9.5
Length	do	50.75
Capacity	cubic inches	3,597
Total capacity of bore	do	14,125
Powder charge:		
Kind of powder		UR Brown pris.
Weight of charge	pounds	125
Density of loading		0.9619
Projectile:		
Weight of projectile (filled)	pounds	300
Ratio of weight to weight of piece		$\frac{1}{108}$
Length of projectile	calibers	3.5 4.5
Sectional density $= \frac{W}{d^2}$		4.6875
Travel of projectile, in bore	calibers	25.66
Muzzle velocity	foot-seconds	1,950
Pressure per square inch in powder chamber	pounds	37,000
Muzzle energy	foot-tons	7,907.5
Penetration in steel at—		
Muzzle	inches	16
1,000 yards	do	14.2
2,500 yards	do	11.9
3,500 yards	do	10.6
Forgings:		
Total weight	pounds	39,674
Weight of tube	do	9,632
Weight of jacket	do	9,712

Digitized by Google

CARRIAGES FOR THE 8-INCH B. L. RIFLE.

For the 8-inch rifle there are two general classes of carriages—casemate and barbette.

Casemate carriages, as explained in Chapter I, are mounted in a covered emplacement, and the guns are fired through embrasures. A type of neither of the two forms, simple casemate and minimum port casemate, has at this date, December, 1894, been adopted for service.

Barbette carriages are designed to be mounted behind an open parapet, and are of two forms—fixed or nondisappearing and disappearing.

FIXED OR NONDISAPPEARING BARBETTE CARRIAGE FOR THE 8-INCH B. L. RIFLE.

This carriage is of the center-pintle form and consists of a base ring resting upon the masonry foundation, to which it is bolted; a live-roller ring resting upon this, a combined racer and chassis of cast iron, a top carriage containing the trunnion beds and hydraulic cylinders, a chain-traversing apparatus, the elevating system, a projectile-lifting device, and the loading platform.

It is maneuvered by hand. The recoil is controlled by two hydraulic cylinders, and the return to position in battery is secured by gravity, the chassis rails having a slope of 4 degrees.

The base ring is of cast iron, made in one piece, 10 feet 4 inches in diameter, secured to the foundation by sixteen 2-inch bolts through its lower flange. The lower roller path, with an outside diameter of 95.95 inches, is on its upper surface. The pintle rising from the center of the base ring is a right cylinder, 8.05 inches high and 37.95 inches in diameter. It has an oil groove on its outer surface.

The live-roller ring consists of twenty forged-steel conical rollers resting at equal intervals on the lower roller path, with end trunnions in inner and outer wrought-iron distance rings, 4 inches wide, slotted to receive the trunnions. These rings are held concentric with each other by ten wrought-iron 1-inch separator bolts passing through the inner and outer rings between the rollers, and ten cast-iron sleeves mounted upon the bolts. The system is held concentric with the pintle by flanges on the inner ends of the rollers, extending above and below the inner elements of the respective roller paths.

The combined racer and chassis is of cast iron, made in one piece, with transoms and outer strengthening ribs. The lower surface, constituting the upper roller path, rests upon the live-roller ring system. Four forged-steel clips or guide hooks are bolted on the lower exterior surface, each with five 1⅞-inch tap bolts. The lower lips of these guide hooks engage under a corresponding flange of the lower roller path. These are provided to prevent the chassis from rising. Between them is a dust guard, made in four sections, extending about the live-roller ring system. A circular flange on the interior of the racer constitutes the pintle ring, and extends down over the pintle cylinder of the base ring.

The top carriage rests upon eight steel recoil rollers, 8 inches in diameter on each side, mounted in a U-shaped recess in the top of the chassis rails. These rollers are bushed with bronze, and mounted upon 2-inch screw bolts or axles seated in the walls of the recess.

The chassis cheeks are united by three transoms. Their front ends overhang the racer and are connected by the front transom. The piston rods pass through lugs which project upward from the front ends of the rails and are secured by the piston-rod nuts and check nuts. The front surface of the rails and of these lugs is planed as a seat for a shield, should it be desired to mount one.

The top carriage is of steel, cast in one piece. It consists of the two trunnion-bed side frames united by a transom passing under the gun. The two recoil cylinders are cast in the side frames immediately over the chassis rail. Flanges under the recoil cylinders are clipped

Digitized by Google

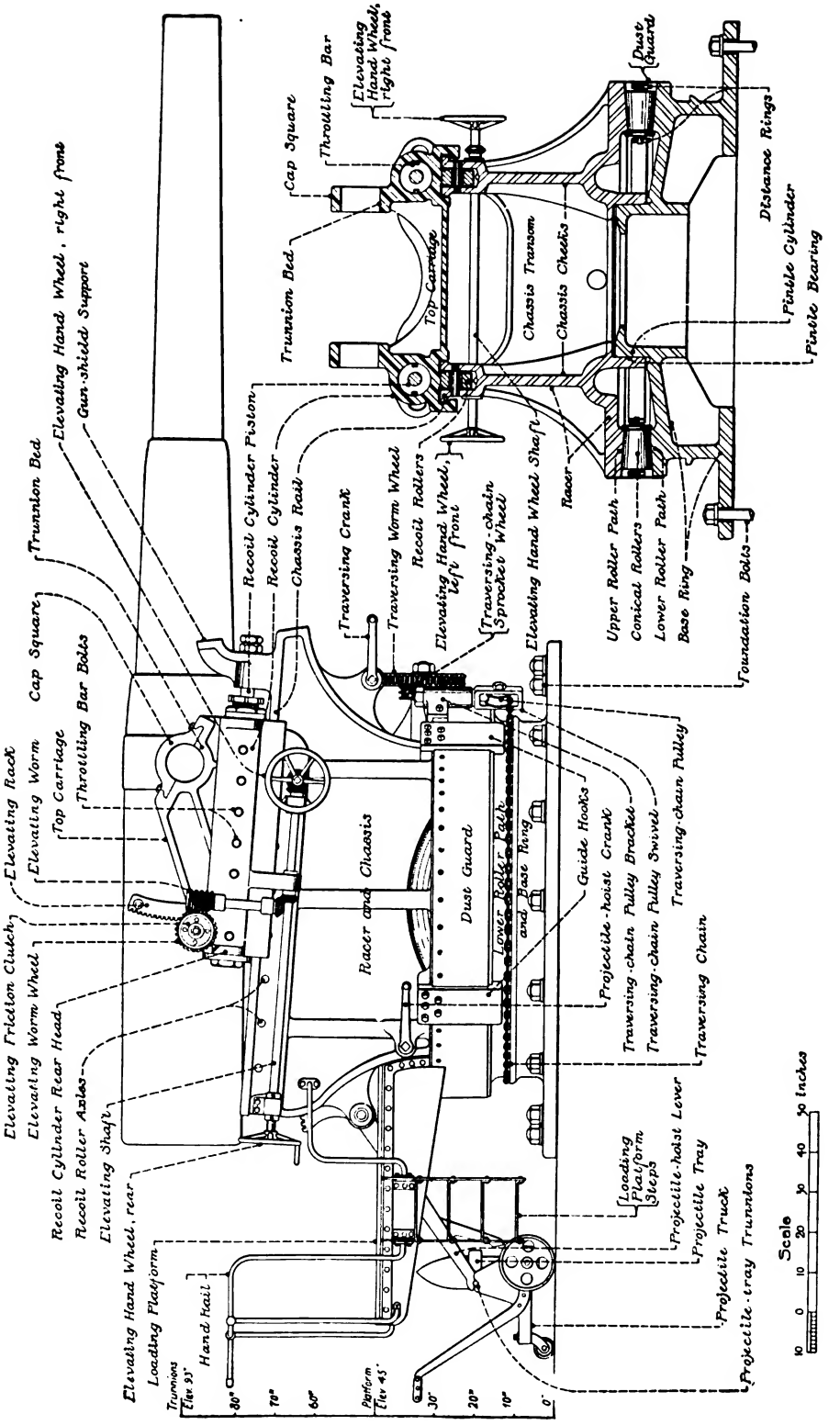

Fig. 56
8 inch B.L. Rifle. - Steel 14½ tons.
Barbette Carriage

Digitized by Google

Digitized by Google

over corresponding flanges in the rails. The cylinders are 8.5 inches in diameter, each fitted with a steel piston rod 3.25 inches in diameter, whose piston has a clearance of .01 of an inch. During the recoil the pistons remain stationary, and the top carriage, with its recoil cylinders, is drawn over them, thus subjecting them to no buckling stress.

Uniform resistance in the cylinders is obtained by the passage of the liquid from the rear to the front through the varying sized ports caused by throttling bars, whose front faces are curved, bolted one on each side of the cylinders. The sectional areas of these bars are such that the orifices for the flow of the liquid vary with the position of the head so as to insure the desired resistance in the cylinders. The piston has rectangular slots, one on each side, which fit over the throttling bars. The rear end of each cylinder is closed by a screw-plug cover. In the front face of this plug there is a cylindrical cavity 5 inches deep, with rounded bottom. The end of the piston rod fits into this with a clearance of .005 of an inch. When the gun returns into battery, the liquid caught in this recess can only escape through this small clearance, thus acting as a buffer to check the velocity of return at the end of the slide. In the front end there is a bronze neck plug and packing ring, with stuffing box between, over which is a screw-plug head, fitting about the piston rod. A copper equalizing pipe, entering immediately behind the glands with a steel reducing plug and a bronze union nut, connects the forward ends of the cylinders. By it the pressure is kept the same on both pistons. With full charges the recoil is about 40 inches.

The cylinders are filled through holes in the top, 9.5 inches from the rear end, closed by screw plugs with copper washers under the heads.

The cap-squares are dovetailed and secured by 1-inch tap bolts, one in front and one in rear.

TRAVERSING GEAR.

The carriage is traversed by a chain coupled through its end links to two ear bolts passing through lugs cast on the outer vertical surface of the base ring below the roller path. By means of nuts on these bolts the length of the chain may be given all necessary adjustment. Wrought-iron bolts are mounted vertically 8 inches each side of the longitudinal axial plane in brackets bolted upon the racer. A rectangular slot is mortised through the lower end of these bolts, in the walls of which are mounted 1½-inch steel bolts, which serve as axles for pulleys for changing the direction of the traverse chain, so as to carry it up over a sprocket wheel, splined to a worm wheel in front of it. This sprocket wheel and worm wheel are mounted on a horizontal steel axle bolt in a bearing cast on the racer. The head of this bolt, squared on one side, bears against a corresponding seat on the racer, and it is thus prevented from turning.

The traversing worm wheel engages in a worm keyed on a transverse through shaft, mounted in bronze-bushed bearings in brackets cast on and projecting to the front from the chassis. On the squared ends of the traversing shaft there are crank levers 18 inches long with handles covered by loose wrought-iron sleeves.

ELEVATING MECHANISM.

Elevation is given by an elevating rack, bolted by two 1¼-inch bolts to a band on the gun. A pinion, mounted upon a short cross shaft, engages in this rack. This elevating pinion shaft is mounted in a bearing drilled in the top carriage over the rear end of the right recoil cylinder. On the outer end of the same shaft there is keyed a friction-clamp disk, fitting in a ground seat in the outer face of a worm wheel and brought to a bearing in its seat by a nut on the end of the shaft. By this clamp excessive stress on the elevating system is relieved during firing. The worm wheel engages in a worm cut on a sleeve

Digitized by Google

splined upon a vertical shaft having its bearings in two lugs on the outside of the top carriage. On the lower end of this worm shaft there is splined a bevel gear, which engages in a second bevel gear upon the main elevating shaft, which is supported, parallel to the top surface of the right chassis rail, by two wrought-iron brackets bolted to the outer face of the latter. This second bevel gear slides upon the squared section of this shaft, being carried back and forth in the recoil of the top carriage by an arm cast upon the latter, through which the hub of the gear extends, secured by a nut abutting against the front side of the arm. There is a handwheel on the rear end of the shaft for the use of the gunners. The front end has another bevel gear which engages in a bevel gear mounted on the elevating handwheel shaft, a transverse through shaft, having its bearings in bronze sleeves, in the chassis rails, near their forward ends. On each end of this shaft there is a bronze handwheel to assist in elevating the gun. These wheels are secured by nuts.

ELEVATION INDICATOR.

Degrees of elevation are noted on the elevation indicator. This consists of a bronze rack attached to the end of the left trunnion of the gun.

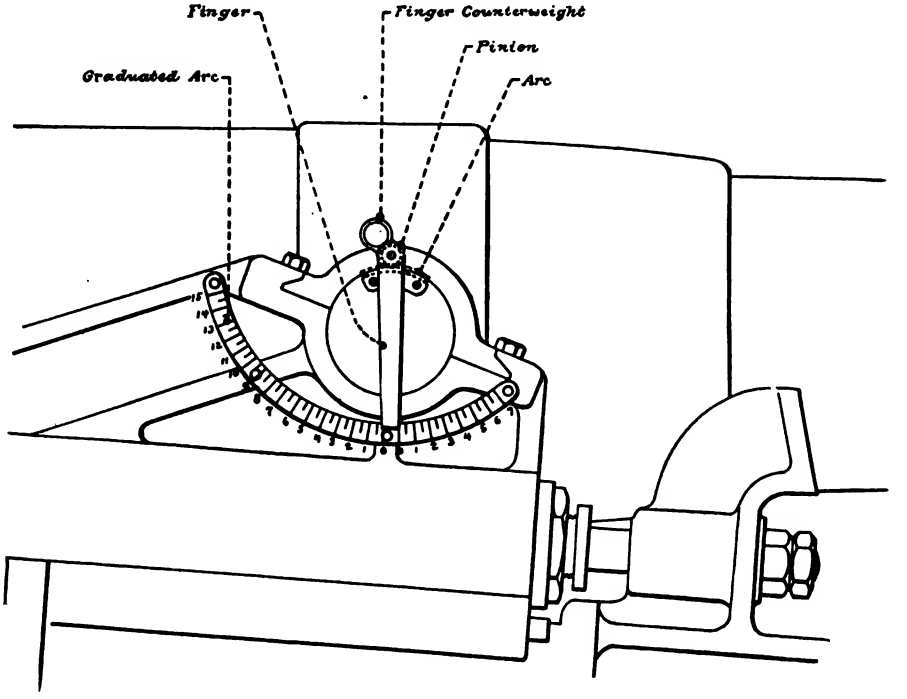

Fig. 56a. Elevation Indicator for Seacoast Gun Carriages.

The rack gears with a bronze pinion on a stud attached to the cap-square; a pointer attached to the pinion indicates the degrees of elevation or depression on a graduated bronze arc attached to the top carriage. A spring catch permits the easy removal of the pointer to prevent injury during the firing. An adjustable counterweight to the pointer controls the contact between the teeth of the rack and pinion and takes up the back lash. The arc is graduated to represent degrees and half degrees, and by means of the graduations on the pointer can be read to two minutes. Direction plates for elevating apparatus are attached to either side of the chassis above the elevating handwheels.

Digitized by Google

PROJECTILE HOIST.

The hoisting of shot is effected by a forked arm rotated to a position in rear of the breech by means of a crank shaft actuating a worm gearing. The projectile is carried in a bronze tray provided with trunnions fitting into notches in the cheeks of a shot truck. This truck is brought up in rear of the gun carriage and placed in such a position that the cheeks of the truck overlap the top prongs of the shot hoist, and notches cut in the prong arms engage the trunnions of the shot tray. The tray is then revolved to a position at the breech in line with the axis of the bore, and the shot rammed through it into the gun, the opening in the bottom of the tray being sufficiently large to admit the head of the rammer.

For convenience in loading the shot on the truck in the magazine the tray is held in a horizontal position on the truck by a securing pin passed through the arms of the truck underneath the tray. This is removed as soon as the shot is loaded on the truck.

The loading platform consists of a flooring 45 inches above the terreplein, supported by boiler-iron brackets strengthened by T irons riveted along the edges. It is inclosed by a wrought-iron tubing hand rail. A set of four steps on each side gives access to the platform. These are supported by sidepieces and struts bolted to the platform. A slot through the middle of the flooring permits the projectile to be lifted by the hoist to its position opposite the breech of the gun, into which it is pushed and rammed by cannoneers standing on the platform. A separate loading tray is placed in the gun to protect the screw box.

A small platform for the gunner to stand upon while sighting the piece with the side sights is attached to the left side of the loading platform.

The carriage permits of traversing the gun through 320 degrees, and of elevating it from minus 7 degrees to plus 18 degrees. The weight of the carriage is 55,418 pounds, and of the moving parts 35,568 pounds.

The cylinders should be filled with neutral oil before firing. In climates where this would freeze, a mixture of methyl spirits, neutral oil, water, and carbonate of soda should be used.

Neutral oil is a product obtained by successive distillations from crude petroleum, and has a specific gravity of from .30 to .32.

The weights of the principal parts of the 8-inch barbette carriage are as follows:

	Pounds.
Top carriage	6,620
Chassis	19,000
Base ring	19,850
Platform	1,014
Piston rod and heads	430
Recoil rollers	864
Conical rollers for traversing apparatus	2,800
Distance rings	580
Guide hooks	562
Other parts	4,198
Total	55,418

THE BUFFINGTON–CROZIER DISAPPEARING BARBETTE CARRIAGE FOR THE 8-INCH B. L. RIFLE.

This carriage is of the front pintle form, and consists of the following principal parts, viz: The levers, the top carriage, the cheek plates or chassis, the elevating gear, the racer, the live rollers, the base ring, the transoms, the traverse wheels, the traverse circle, the traversing gear, and the projectile crane.

Digitized by Google

The trunnions of the gun rest in bearings bushed with bronze, on the upper ends of the levers. The levers are made of cast steel, and are pivoted near their middle points upon an axle of forged steel. The axle rests in bearings bushed with bronze in the top carriage, which is formed with the two hydraulic cylinders in one piece of gun iron. In each cylinder are two throttling bars of steel, which pass through notches in the piston and serve to regulate the size of the orifices for the flow of the liquid past the pistons, being of variable cross section. The hydraulic cylinders are connected by a pipe at their forward ends to equalize the pressure in them during recoil.

The piston rods with the pistons formed on them are made of forged steel, and are fastened by means of nuts to projections on the chassis. They are produced through the rear cylinder heads.

The top carriage rests upon rollers of forged steel, which are placed in recesses in the cheek plates. The axles of the rollers are of forged steel, and the rollers are bushed with bronze where the axles pass through them. The cheek plates are made of cast steel, and are united by three transoms, also of cast steel, the rear one being for the traverse wheels. The cheek plates are bolted at their forward ends to the racer, and have guides bolted to them for the elevating rack. Their upper surfaces have a slope of 2 degrees to the front to facilitate the return of the piece to battery, and to reduce the preponderance of the counterweight.

The elevating rods are of forged steel, the journal bearings, at their upper and lower ends, being bushed with bronze. The lower ends of the rods are attached to elevating racks of bronze. The elevating handwheels are of wrought iron and are mounted on a through shaft, upon which are pinions of bronze gearing into spur wheels of cast steel. On the shaft with these are pinions of bronze, gearing into the elevating racks.

The action of the system in recoiling is such that no matter what elevation the gun may have when fired, it will have practically the same inclination to the horizontal—about 7 degrees—in loading position.

The racer is of cast steel, and the base ring of gun iron. Their inner parts form a pivot or pintle, which has a spiral groove cut in one of the surfaces to facilitate lubrication. The base ring is fastened to the platform with sixteen 1¾-inch holding-down bolts. The rollers are conical and of forged steel.

The counterweight is of lead, and weighs 32,000 pounds. It is suspended by two rods from a shaft joining the lower ends of the levers. This shaft is of forged steel and passes through the lower ends of the levers into two clips forming a crosshead, the holes in the levers being bushed with bronze. It is pinned to the clips, with which it forms the crosshead. The crosshead clips are of cast steel and are lined on their bearing surfaces with bronze strips. They are given additional support, when in the lowest position, against a projection of a chassis.

The crosshead guides are formed on the inner sides of the chassis. A vertical ratchet is made on one face of each crosshead clip to be caught by a pawl on the chassis and thus to hold up the counterweight. This pawl is mounted upon a short crank actuated by a long lever at the side of the carriage, and the arrangement is used for lowering the piece should the recoil not be sufficient.

The rear traverse wheels and their transom are of cast steel, and the axes of the wheels rest on roller bearings.

The traversing chain lies around the traverse circle and is fastened to the parapet. It is provided with an arrangement for taking up the slack. The circle is of gun iron and is cast in segments and fastened to the platform by 1½-inch holding-down bolts.

Digitized by Google

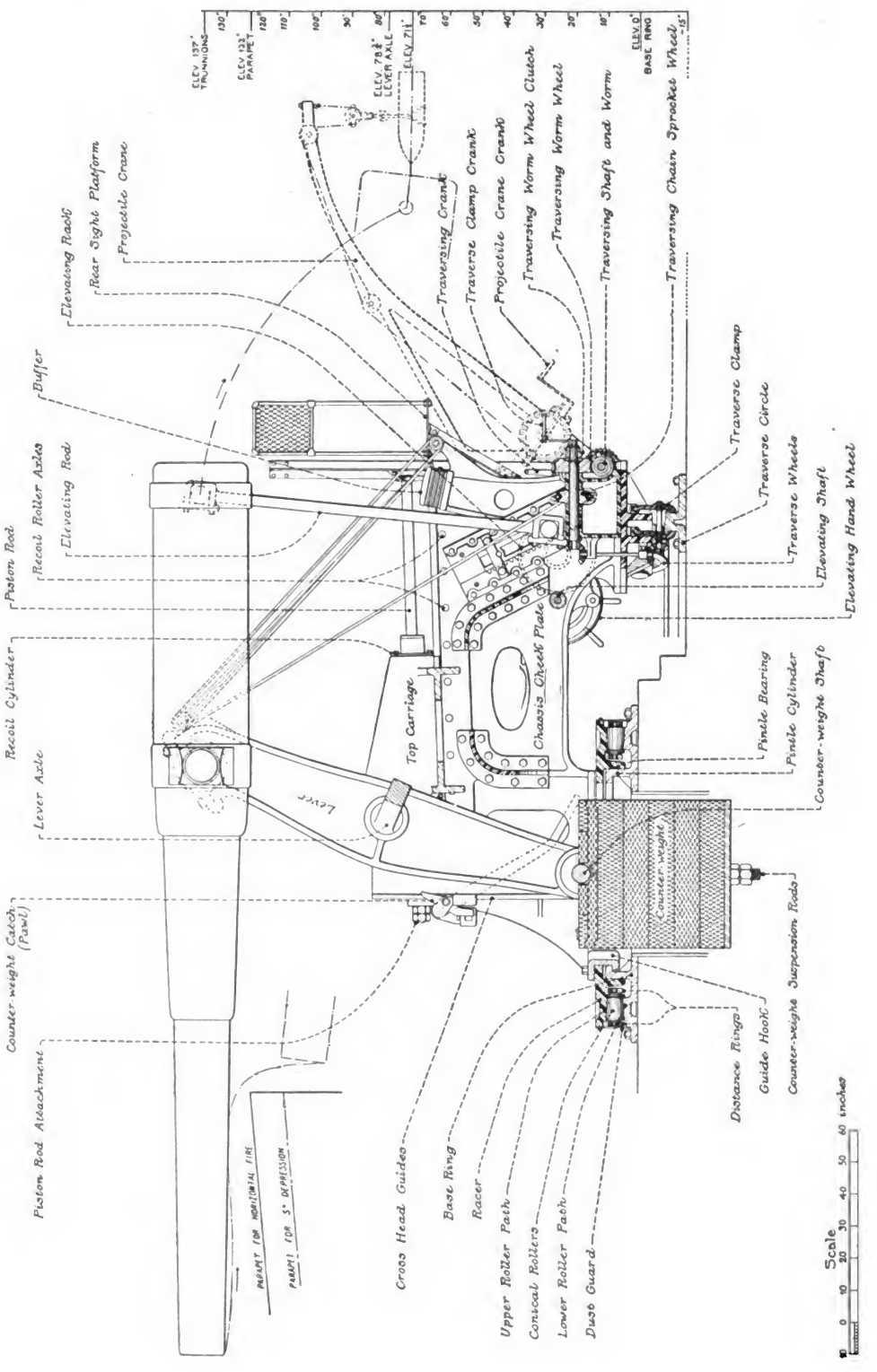

Fig. 57
Buffington-Crozier Disappearing Carriage
For 8 inch B.L. Rifle

Digitized by Google

Digitized by Google

The action of the carriage is as follows: Upon firing the piece the central pivot of the levers moves horizontally to the rear, carrying the top carriage with it. The lower end moves vertically upward, being constrained by the crosshead guides. The gun moves downward and to the rear in the arc of an ellipse. The energy of recoil is absorbed partly by raising the counterweight and partly by the resistance of the hydraulic cylinders. After loading the pawls are tripped and the greater moment of the counterweight enables it to raise the piece into battery. The return to battery is softened by hydraulic counter-recoil buffers in the cylinders, forming a sort of dashpot.

The piece is hauled down into the loading position by hand for drill and cleaning by a windlass arrangement, the rope leading through sheaves on the levers and chassis.

Three fulcrum pins are inserted in each chassis near the forward end of the top carriage to serve as points of support for pinching levers held vertically, and engaging in ratchets bolted to the undersides of the top-carriage clips, for heaving the top carriage forward in case it should not return to the firing position. A spring prevents the loading crane from swinging to a position under the breech of the gun, where it might be struck by the latter upon recoil.

This carriage is capable of great rapidity of fire. Ten shots from an 8-inch gun have been fired from it in twelve minutes and twenty-one seconds. In the loading position the gun is completely covered from a shot arriving at an angle of 7 degrees. The field of fire is 127 degrees, and the pointing of the gun can be varied from 12 degrees elevation to 5 degrees depression.

10-INCH BREECH-LOADING RIFLE.

This gun is of similar form and construction to the 8-inch B. L. rifle. It is composed of a tube, jacket, A, B, C, and D hoops, and the breech mechanism. The number of hoops has been reduced in the different models as steel manufacturers have become able to manufacture larger forgings. The increased length of these hoops in the latter constructions has much increased the stiffness of the gun.

MODEL 1888.

The interior tube is enveloped by the jacket and seven C hoops. The jacket projects to the rear of the tube a sufficient distance to allow room for the screw box, and abuts against shoulders on the tube at its rear end and also against a shoulder on the tube at the front end of the jacket. The tube and jacket are coupled together by two steel coupling pins, which are driven into holes drilled partly in the tube and partly in the jacket, at the front end of the latter. The pins are inserted tangentially instead of raidially, as was the case in the type gun. The C_1, C_2, and C_3 hoops are cylindrical. C_1 abuts against the forward end of the jacket and against the shoulder on the tube. Hoops C_4, C_5, C_6, and C_7, are shrunk on the tube in steps, their exterior diameters gradually decreasing to the muzzle.

These hoops are locked together by the annular recess of the one in front, fitting over a lip on the one just in rear.

The D_1 hoop, by means of a recess on its interior, locks the jacket to the C_1 hoop, gripping shoulders being left on the jacket and hoop for that purpose.

The filling ring is a split ring, which is placed between the front shoulder of the jacket and the rear end of the D_1 hoop to fill the space which is left between the jacket and hoop to allow for longitudinal expansion in shrinking on the D_1 hoop.

Hoop D_2 connects with D_1 by means of a lip and recess and abuts against the shoulder on C_2.

Digitized by Google

The five A hoops extend in the order of their numbers from a shoulder on D1 to the rear end of the jacket, the last hoop containing a recess which fits over a corresponding projection on the jacket, locking the two surfaces together.

The B hoops envelope the A hoops, breaking joints with them. The trunnion hoop, B1, abuts against a shoulder on A1 hoop. On the interior of the gun, at the rear, the screw thread is cut in the jacket, and carries the block.

On a few guns a space of .05 of an inch is left between the rear end of the tube and the corresponding surface of the jacket, and a small conical lip on the rear end of the tube projects over this opening. The conical space between the exterior of the lip and the interior of the jacket is calked with a copper ring. The gas-check seat is at the rear end of the tube.

The powder chamber is cylindrical and is joined to the rifled bore by a conical slope. The front part of this slope forms the seat for the band of the projectile. From the front of this slope the tops of the lands of the rifling are made conical for a length of 45 inches. The rear ends of the lands, for a length of ½ inch, have the same slope as the shot chamber.

The breech mechanism is the same as that of the 8-inch B. L. rifle except that the breechblock is made with four threaded sectors and four slotted sectors instead of three.

The obturator and tray are the same as in the 8-inch gun. The breech plate is the same, except that compound gearing is used for rotating the breechblock instead of direct gearing, as in the 8-inch.

The action of the breech mechanism is the same as explained in detail for the 8-inch gun.

MODEL 1888, MODIFICATIONS I AND II.

These guns differ from the model of 1888 only in the number of hoops and their arrangement. The model of 1888, M. I, has only five C hoops instead of seven. In the Model of 1888, M. II, the C hoops are reduced to two, the A hoops to three, the B hoops to three, and only one D hoop is used. In future constructions of the 10-inch gun the coupling pins will be omitted.

The principal weights, dimensions, etc., are as follows:

Weight	pounds	67,200
	tons	30
Total length	feet	30.60
Length of bore	calibers	34
Maximum diameter of breech	inches	38.5
Diameter of muzzle	do	16.8
Diameter of trunnions	do	12
Length of trunnions	do	6.75
Distance between rimbases	do	42
Distance of axis of trunnions from muzzle	do	243.6
Rifling:		
Number of grooves		60
Width of grooves	inch	0.3736
Depth of grooves	do	0.06
Width of lands	do	0.150
Twist of rifling	calibers	1 in 50 to 1 in 25
Powder chamber:		
Diameter	inches	11.8
Length	do	65.09
Capacity	cubic inches	7,064
Total capacity of bore	do	28,977

Digitized by Google

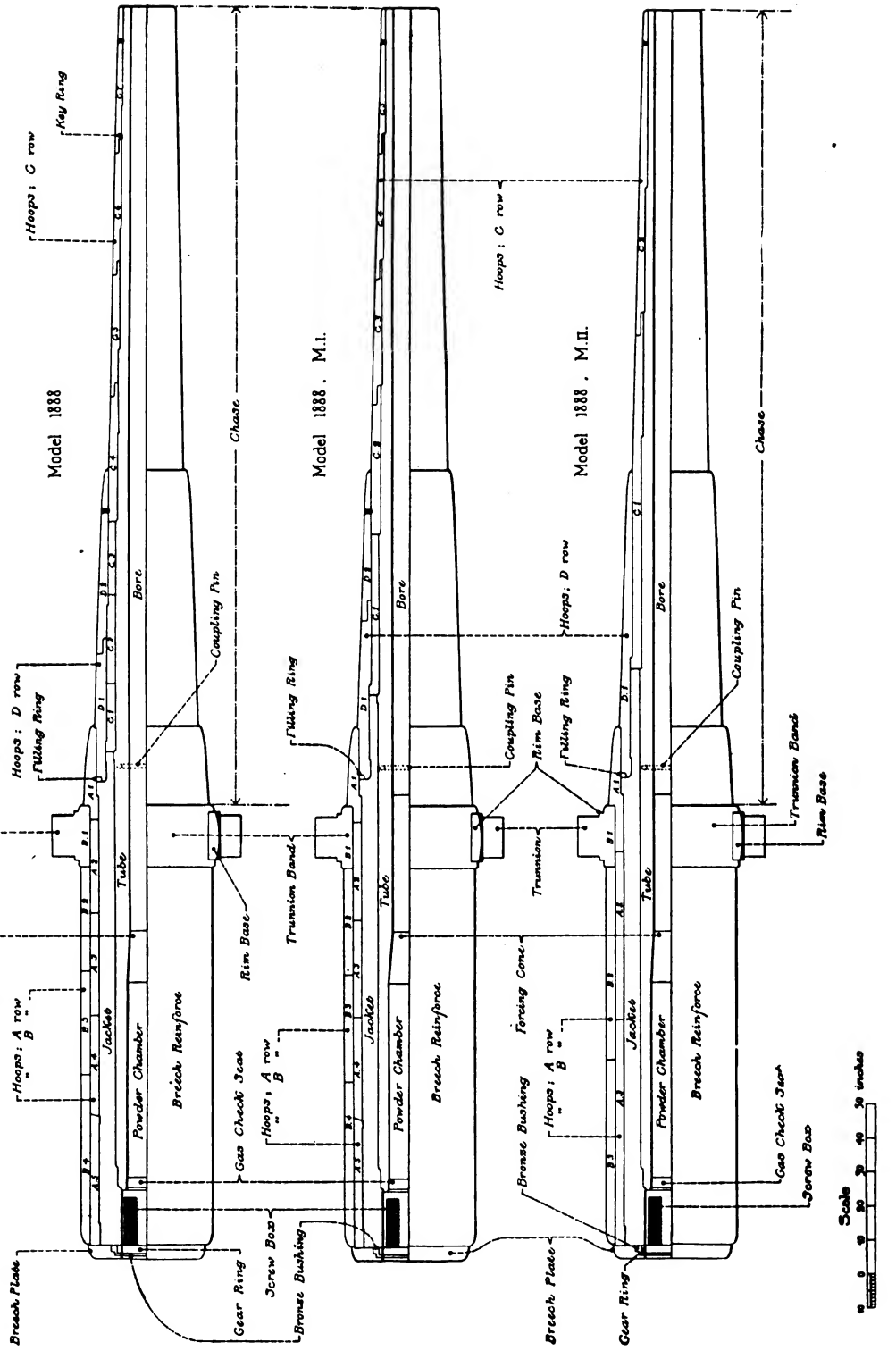

Fig. 58
10 inch B.L.Rifles. – Steel, 30 tons

Digitized by Google

Digitized by Google

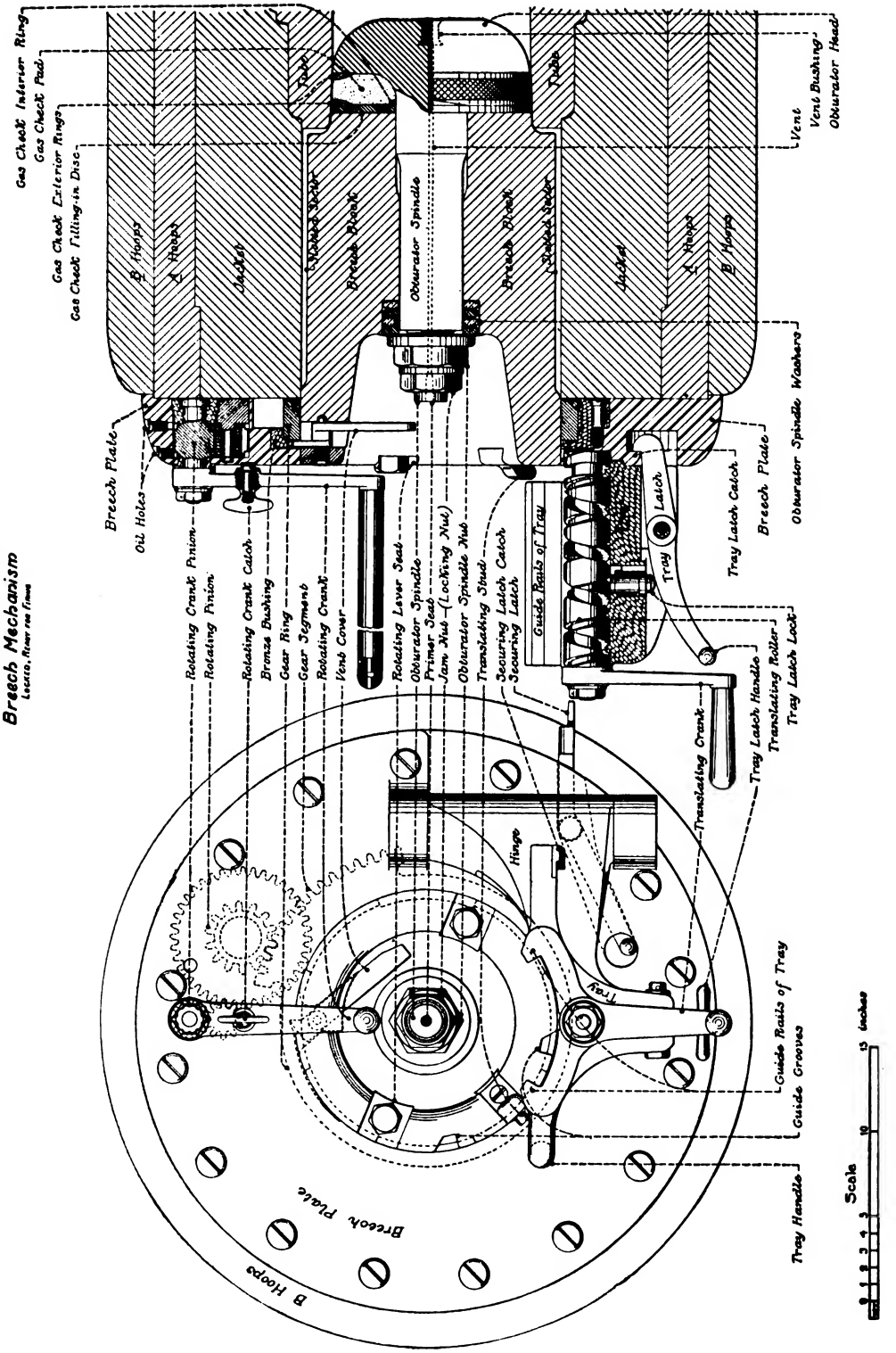

Fig. 59
10 inch B.L. Rifle – Steel, 30 tons
Model 1888 & 1888 Modified
Breech Mechanism
Locked, Rear Face Times

Digitized by Google

Powder charge:		
Kind of powder		WH Brown pris.
Weight of charge	pounds	250
Density of loading	do	0.9797
Projectile:		
Weight of projectile (filled)	pounds	575
Ratio of weight to weight of piece		$\frac{1}{117}$
Length of projectile	calibers	3.5 / 4.5
Sectional density $= \frac{W}{d^2}$		5.7500
Travel of projectile, in bore	calibers	27.51
Muzzle velocity	foot-seconds	1,975
Pressure per square inch in powder chamber	pounds	37,000
Muzzle energy	foot-tons	15,548
Penetration in steel at—		
Muzzle	inches	20.4
1,000 yards	do	18.5
2,500 yards	do	16
3,500 yards	do	14.6
Forgings:		
Total weight	pounds	82,664
Weight of tube	do	18,945
Weight of jacket	do	18,115

CARRIAGES FOR THE 10-INCH B. L. RIFLE.

The same classes of carriages are used with the 10-inch rifles as with the 8-inch. Those that can at this date (January, 1895) be regarded as adopted are the nondisappearing barbette, and the Buffington-Crozier and Gordon disappearing barbette carriages.

THE NONDISAPPEARING BARBETTE CARRIAGE.

This carriage differs but little from the 8-inch, except in proportions. Instead of the projectile hoist of the 8-inch carriage a swinging crane is used to lift the projectile to the level of the loading tray. A substantial bracket is bolted to the rear of the left chassis rail, and in this the crane is pivoted. The mast of the crane is made of wrought-iron pipe, 4 inches in diameter outside, to which is welded the crook carrying a double pulley at its end. The hoisting chain passes over another pulley in a bracket about midway down the crane, where its direction is changed to a drum with compound gearing and a crank arm.

The mode of elevating the gun and traversing is the same as in the 8-inch carriage.

THE BUFFINGTON–CROZIER DISAPPEARING CARRIAGE FOR THE 10-INCH RIFLE.

This carriage is, in all essential features, similar to the 8-inch carriage of the same type. Its parts are made stronger and heavier in proportion to the increased caliber of the gun for which it is intended, and the chassis rails are given an inclination of 2 degrees instead of being horizontal as in the 8-inch.

This carriage, like the 8-inch, is capable of great rapidity of fire. At the rapidity test of the type carriage, ten rounds were fired from it in 14 minutes $41\frac{9}{10}$ seconds.

THE GORDON DISAPPEARING BARBETTE CARRIAGE.

This carriage is of the center-pintle form, and has been adopted for positions requiring all-around fire. At this date the plans for the manufacture of this carriage for service have not been sufficiently matured to be given in detail. The main features will, undoubtedly, be

Digitized by Google

the same as those of the experimental carriage, but important changes will be made for the purpose of simplifying its construction and insuring certainty of action.

The carriage may be described in a general way as follows:

A heavy bedplate supports two side frames, which carry the movable parts of the carriage on journals, and a pivot plate is permanently fastened to the under surface of the bedplate, the whole resting on a heavy cast-iron platform or traverse circle.

The top carriage is of steel, triangular in form, not unlike the top carriage of the old-style barbette mount. At the apex of this top carriage rest the trunnions of the gun, and with it is connected the elevating and depressing mechanism.

The main frame is of massive cast iron, and consists of a heavy bedplate supporting two ponderous side frames, through which are journaled the four double cranks, upon the inner and longer arms of which the top carriage is supported, and upon the four outer and shorter arms the heavy counterpoise frame is lifted when the gun recoils.

The four double cranks are journaled through the sides of the main frame, two on each side, and revolve freely upon these journals through an arc of about 180 degrees. When the gun is in firing position the crank arms are nearly vertical. When the gun is fired the top carriage, supported by the four longer crank arms, is carried backward and downward, describing the arc of a circle, until it rests, folded closely down between the side frames, while the counterpoise, lifted by the lower and shorter crank arms, is swung upward and forward through the arc of a smaller circle, and rests parallel and nearly level with the gun.

The counterpoise consists of a massive cast-iron frame, constructed outside of and around the main frame of the carriage, forming a loading platform in the rear and a protection for the hydraulic cylinders, which are secured to the bedplate in front. This counterpoise is mounted upon the shorter and outer crank arms, which connect it with the top carriage.

The system is intended to be accurately counterpoised and hence the recoil produces no motion of the center of gravity. The carriage, as a whole, is therefore a nonrecoil system.

The gun, top carriage, and counterpoise remain parallel to their original positions throughout the motion. The elevating device is attached to the top carriage, and is independent of any other part of the construction.

Between the side frames and secured to the bedplate are two hydraulic cylinders, 12 inches in diameter, which are connected by means of check valves with the air chamber placed above and across their front ends. The piston rods are connected by means of intermediate rods with the top carriage, so that during recoil the piston rods are pushed to the front, thus forcing the liquid from the cylinders though the check valves to the air chamber. Sufficient energy is thus stored in the air chamber to elevate the gun into the loading position. The by-pass valves are opened for this purpose. A small air pump is used to give the required initial pressure in the air chamber.

For the purpose of maneuvering the carriage by hand, a system of gearing is attached to each side of the counterweight frame. The carriage is lifted on an oil pivot for traversing, and a small hydraulic pump is provided for this purpose. Except when raised for traversing the carriage is in complete contact with the platform. The main parts are of cast iron, the cheeks of the top carriage and the cranks and journals being of steel.

THE MODIFIED GORDON DISAPPEARING CARRIAGE FOR THE 10-INCH RIFLE.

This carriage is similar in appearance to the original, but differs from it in the following particulars:

The weight of the carriage and counterpoise is considerably reduced and more compactly disposed. There is only a single hydraulic cylinder, and the thrust of recoil, instead

Digitized by Google

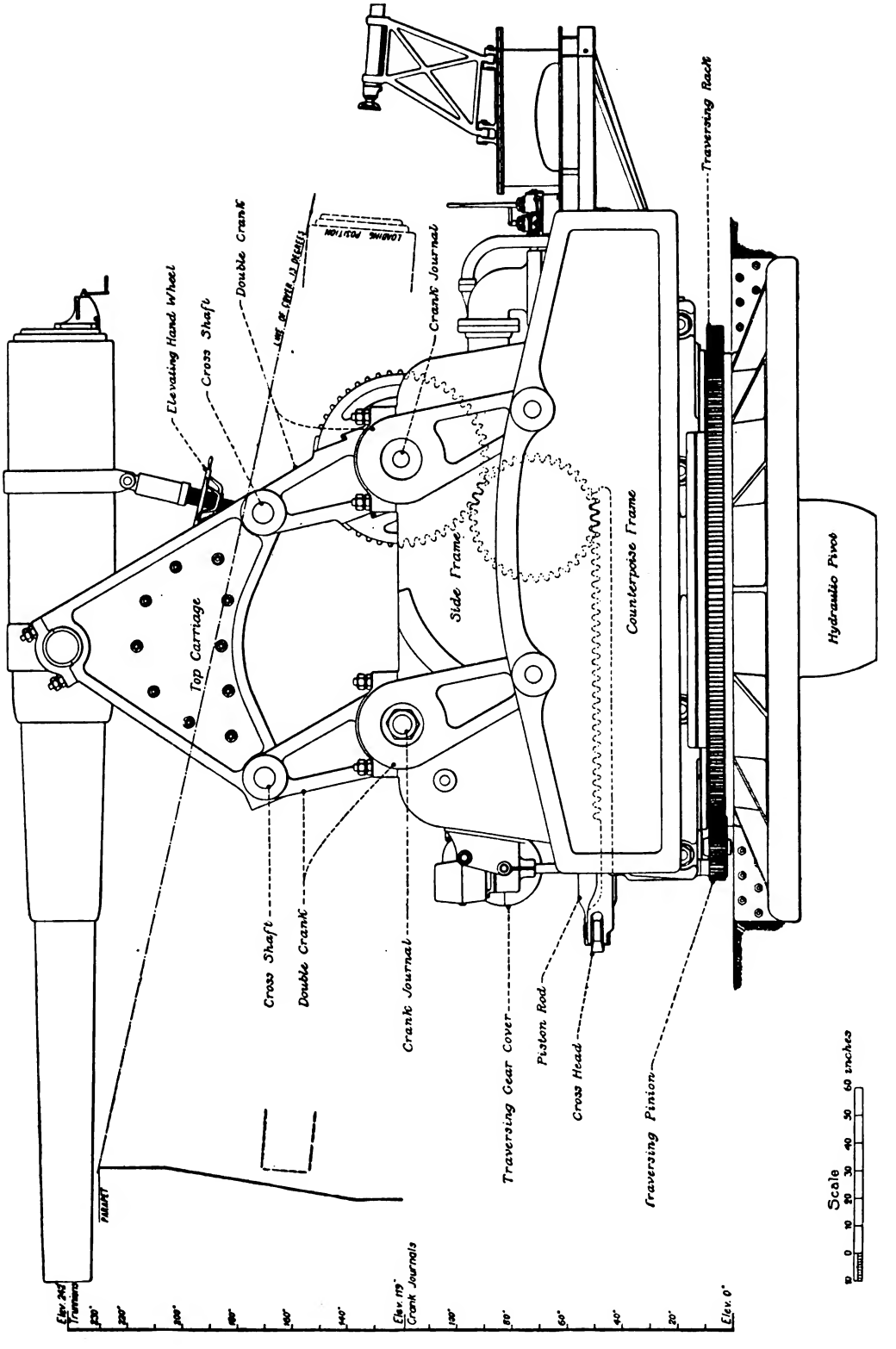

Fig. 60
Gordon Disappearing Carriage
For 10 inch B.L.Rifle

Digitized by Google

Digitized by Google

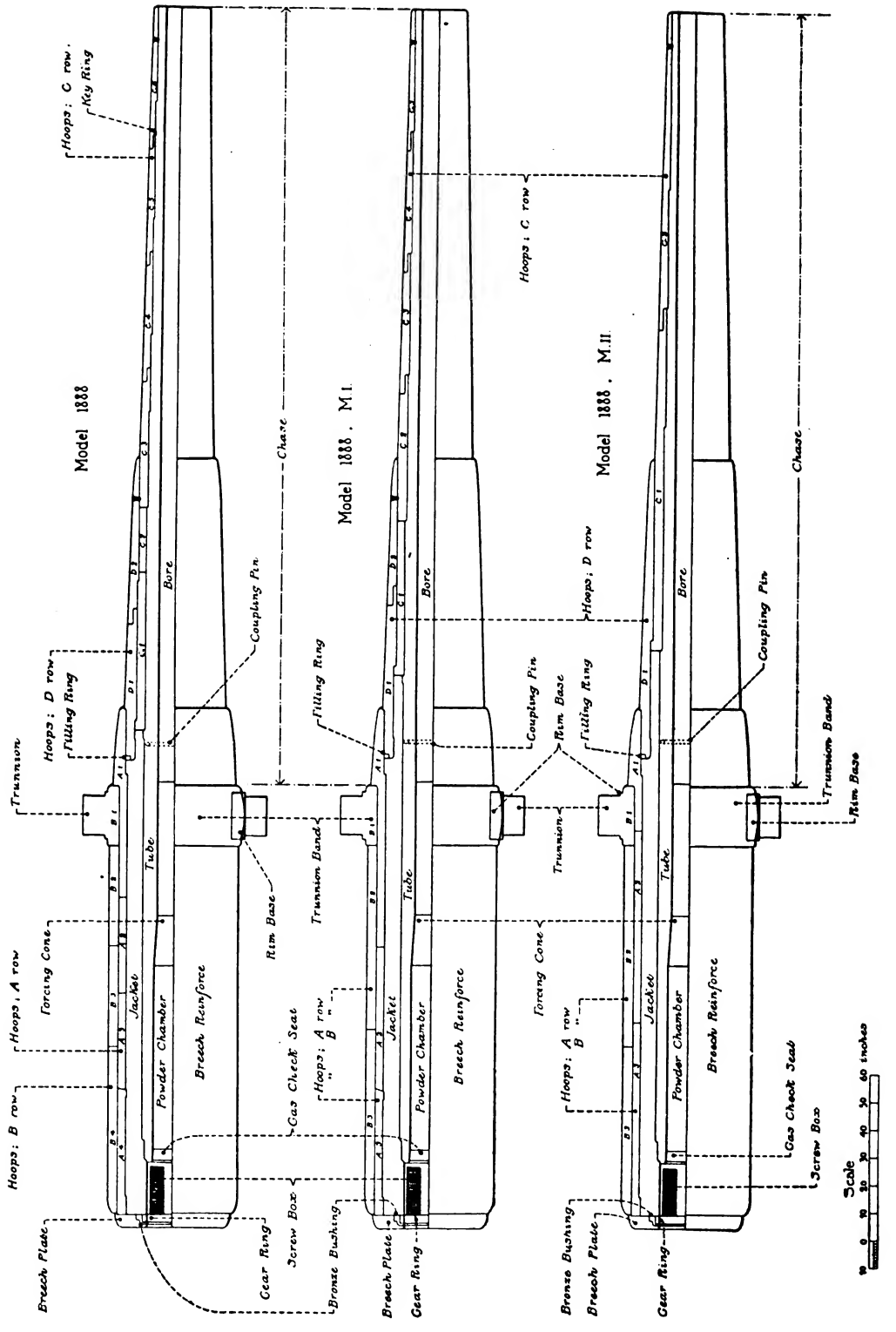

Fig. 61
12 inch B.L. Rifles. – Steel, 52 tons

Digitized by Google

Digitized by Google

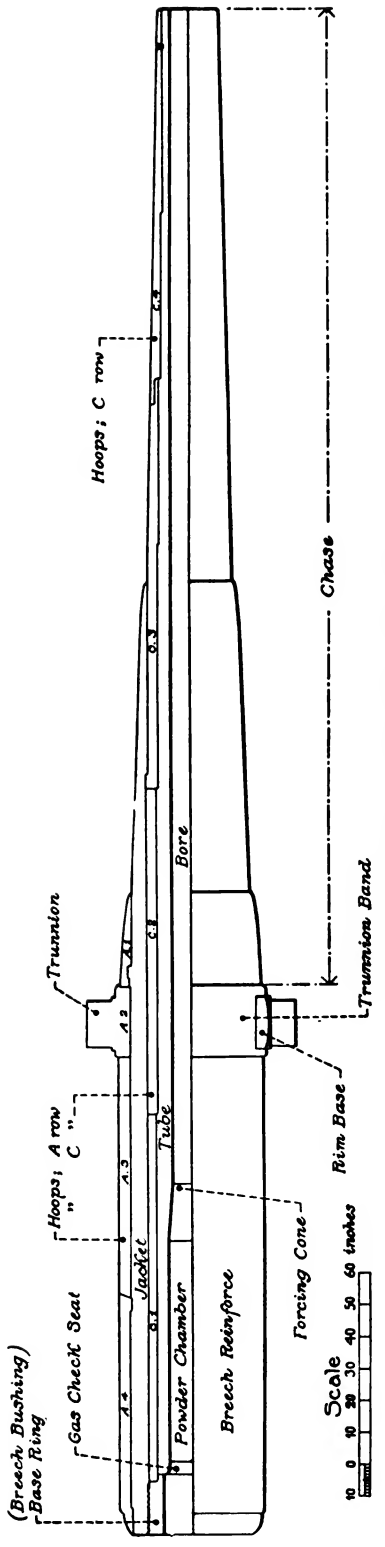

Fig. 62. 12-inch Breech-loading Rifle, model 1892.

of being transmitted to it by connecting rods, is communicated by a combination of gears actuating a cross-head, which produces a direct pressure upon the head of the piston rod instead of an oblique thrust, as in the original carriage. The air chamber or reservoir is placed parallel to the hydraulic cylinder in the left side frame of the carriage. Electric appliances have been added for all movements except elevating and depressing.

This carriage is also capable of great rapidity of fire. A 10-inch rifle was fired thirty-two times in an hour from the modified type.

12-INCH B. L. RIFLE.

This gun, of the model of 1888, and its modifications, resembles so closely the 10-inch rifle of the same year that a detailed description is unnecessary.

The number of C hoops has been successively reduced from ten in the type gun to six in the model of 1888; five in the model of 1888, M. I., and two in the model of 1888, M. II. The eight B hoops in the type gun have been reduced to four, and finally to three in the models 1888, M. I. and M. II. The A hoops have been reduced from seven to four in the model of 1888, and to three in the modifications. The D hoops have been reduced from five, in the type gun, to two, and finally to one in the model of 1888, M. II.

The breech mechanism is the same, except in dimensions, as that of the 10-inch rifle, except that roller bearings are introduced into the tray hinge to make the tray swing more easily with the great weight that it is required to sustain.

MODEL OF 1892.

This gun is, at the present date (January, 1895), in course of manufacture, and has not therefore, of course, been tested and adopted. In this gun a radical departure from the previous methods of construction has been made in that the tube, which is composed of nickel steel, is enveloped from end to end with C hoops, four in number. The length of the gun has been increased from 36.66 feet in the model of 1888 to 40 feet.

The jacket, which is a single forging 299.8 inches in length, is shrunk over the C hoops and projects 19 inches to the rear of the tube. The C1 hoop projects 2.2 inches to the rear of the tube.

The seat of the gas check is in the tube, and a breech bushing is screwed into the rear end of the jacket, as in the 8-inch gun. The block recess is cut upon the interior surface of the breech bushing. The jacket abuts against

Digitized by Google

a single shoulder on hoop C3. Hoops C2, C3, and C4 each abut against shoulders on the tube.

There are four A hoops; A2, in this construction, being the trunnion hoop. A1 is in front of the trunnions, and is locked to the jacket by means of a recess fitting over a projection in the jacket. A4 is locked to the jacket by means of a recess extending nearly its whole length fitting over a corresponding projection on the jacket.

The breech mechanism is the same as in the other 12-inch rifles.

The principal weights, dimensions, etc., of the 12-inch B. L. rifle are as follows:

		Model of 1888.	Model of 1892.
Weight	pounds	116,480	128,719
	tons	52	57.5
Total length	feet	36.66	40
Length of bore	calibers	34	37.83
Maximum diameter of breech	inches	46.2	46.4
Diameter of muzzle	do	20.2	19.8
Diameter of trunnions	do	14.5	14.5
Length of trunnions	do	8	8
Distance between rimbases	do	50.2	50.2
Distance of axis of trunnions from muzzle	do	291.10	318
Rifling:			
Number of grooves		72	72
Width of grooves	inch	0.3736	0.3736
Depth of grooves	do	0.06	0.06
Width of lands	do	0.150	0.150
Twist of rifling	calibers	1 in 50 to 1 in 25	1 in 50 to 1 in 25
Powder chamber:			
Diameter	inches	14.2	14.5
Length	do	77.33	78.58
Capacity	cubic inches	12,092	12,798
Total capacity of bore	do	50,049	55,829
Powder charge:			
Kind of powder		VP Brown pris.	Brown pris.
Weight of charge	pounds	450	487
Density of loading		1.0285	1.0535
Projectile:			
Weight of projectile (filled)	pounds	1,000	1,000
Ratio of weight to weight of piece		$\frac{1}{116}$	$\frac{1}{129}$
Length of projectile	calibers	3.5 4.5	3.5 4.5
Sectional density $= \frac{W}{d^2}$		6.9445	6.9445
Travel of projectile, in bore	calibers	27.58	31.29
Muzzle velocity	foot-seconds	1,975	2,100
Pressure per square inch in powder chamber	pounds	37,000	38,000
Muzzle energy	foot-tons	27,040	30,570
Penetration in steel at—			
Muzzle	inches	24.9	27.1
1,000 yards	do	23	25.1
2,500 yards	do	20.4	22.3
3,500 yards	do	18.7	20.6
Forgings:			
Total weight	pounds	140,578	152,860
Weight of tube	do	32,490	36,054
Weight of jacket	do	31,249	34,374

Digitized by Google

CARRIAGES FOR THE 12-INCH B. L. RIFLES.

Only two forms of carriage for the 12-inch rifle have thus far been adopted—the barbette and the gun lift.

The Emery disappearing carriage is under contract, but the plans are not yet fully matured.

A minimum port-casemate carriage was purchased from the Grusonwerk Company, of Magdeburg, Buckau, Germany, and has passed a satisfactory test, but has not been definitely adopted.

This carriage, as stated in Chapter I, is of the front-pintle form, and the distinctive feature about it is the method of giving elevation to the gun. This is not accomplished by revolving the gun about its trunnions, but by raising or depressing the top carriage and chassis, together with the gun, bodily about a horizontal axis in the carriage, as near to the middle of the rear face of the embrasure as possible. This is done by hydraulic power. Another feature of the carriage is that the chase of the gun is supported at a point in front of the trunnions nearly halfway to the muzzle by a heavy transom with slide rails.

The advantage of the carriage is that the embrasure may be made smaller for the same vertical field of fire than in the case of the ordinary type of the casemate carriage.

THE BARBETTE CARRIAGE FOR THE 12-INCH B. L. RIFLE (NONDISAPPEARING).

This carriage consists of the following principal parts: The top carriage, the chassis and racer, the base-ring, and the devices for checking recoil, elevating and traversing the gun, and lifting the projectile.

The base ring or bedplate is bolted to the platform. Upon it rests a live roller ring of forged-steel rollers, supporting the racer and chassis. The top carriage rests on the latter.

THE TOP CARRIAGE FOR THE 12-INCH B. L. RIFLE.

This is mainly in one piece of cast steel, containing the trunnion beds and hydraulic cylinders. The cheeks are joined by a transom, dished at the rear to permit the elevation of the gun. The carriage rests on eighteen recoil rollers of forged steel, placed in pockets formed in the chassis. The trunnions of the gun are retained in their beds by cap-squares, fitted to undercut recesses in the top carriage and bolted down.

The hydraulic cylinders are machined on the inside and receive the apparatus for checking recoil. Throttling bars of uniform width and varying depth are bolted to opposite interior rectilinear elements of the cylinder, the piston heads being slotted to travel over them. The change in profile of the throttling bars regulates the passage of the neutral oil used in the cylinders through the slots in the piston head according to the force of recoil. An equalizing pipe connects the ends of the hydraulic cylinders, and filling and emptying holes are provided at the front and rear ends of the cylinders. The convex surfaces of the piston heads are covered with bronze, and the trunnion beds are similarly lined.

The cylinders are threaded at the rear to receive steel cylinder heads with recesses, into which fit, with slight clearance, the prolongations of the piston rods, for checking the shock when the gun returns in battery after firing. The front ends of the cylinders are closed by stuffing boxes, consisting of bushings, glands, and followers, through which the pistons pass. The space for packing is filled with hemp, against which the gland forces the follower to prevent leakage of the neutral oil in the cylinders.

The piston rods are attached at the forward ends to projections cast on the front part of the chassis. These projections serve as part supports to a gun shield, which may be bolted to the chassis.

Digitized by Google

The lateral bearing surfaces of the top carriage upon the chassis are lined with bronze strips to prevent burnishing the steel. The outer edges inclose the edges of the chassis rails, to prevent the top carriage from rising when the gun is fired.

THE CHASSIS AND RACER.

These are of cast steel. The chassis rails are inclined at an angle of 4 degrees with the horizontal to insure the easy return of the gun into battery by the action of gravity after firing. The sides are accurately fitted between lugs on the racer, and are securely bolted to the latter. The front end is also hooked over a projection on the racer, on the outside surface of which four forged-steel clips are bolted. A lip on these engages under the geared flange on the base ring to reduce the jump in firing and returning into battery. A dust guard, made in four sections, is bolted between the clips, and protects the live-roller ring. The carriage is provided with rubber buffers at the rear of the chassis in case the recoil is not taken up in the designed 48 inches.

THE BASE RING.

This is in one piece of cast iron, fastened to the platform or bed by sixteen 2-inch bolts. It has a pintle cylinder, over which fits the pintle bearing of the racer. A spiral oil groove is cut in the outside of the pintle cylinder. A live-roller ring of twenty-four conical forged-steel rollers rests upon the bedplate, and upon this ring the remainder of the system is supported and traversed. These rollers rest on an accurately planed surface, and are held at equal intervals from each other between two wrought-iron distance rings, which are slotted to receive trunnions turned on the ends of the rollers. The rings are held concentric with each other by cast-iron separators, fastened to the rings by wrought-iron bolts. Flanges on the inner ends of the rollers, extending above and below the respective roller paths, retain the system concentric with the pintle. The upper flange of the lower roller path is geared all around to receive the pinion used in traversing. A graduated training circle is attached to the lower roller path and is marked to degrees and half degrees. By means of a graduated pointer bolted to the left front clip, the training circle may be read to two minutes.

THE ELEVATING MECHANISM.

This consists of a shaft supported in bearings attached to the right side of the chassis. The shaft is squared for a distance to the rear from its bearings, equal to the length of recoil; it is actuated by two handwheels and a shaft at the front of the carriage through the medium of spiral and mitered gearing. The miter drives an upright shaft working in bearings attached to the top carriage. At the end of this shaft is attached a worm actuating, through a worm wheel, a pinion which operates the elevating arc. The elevating arc is bolted to the gun. The worm wheel has a friction clamp which permits motion to the gear, during recoil, without strain on the elevating mechanism.

The gun can be elevated from either side of the carriage and from minus 7 to plus 15 degrees. Degrees of elevation are noted on the elevation indicator, which is essentially the same as that used on the 8-inch barbette carriage.

The arc is graduated to represent degrees and half degrees, and by means of a graduation on the pointer can be read to two minutes. On the lower edge of the graduated arc space has been left for range graduation.

Plates attached to either side of the carriage above the elevating handwheels indicate the direction for elevating and depressing.

Digitized by Google

Fig. 63
12 inch B.L.Rifle.- Steel.
Barbette Carriage

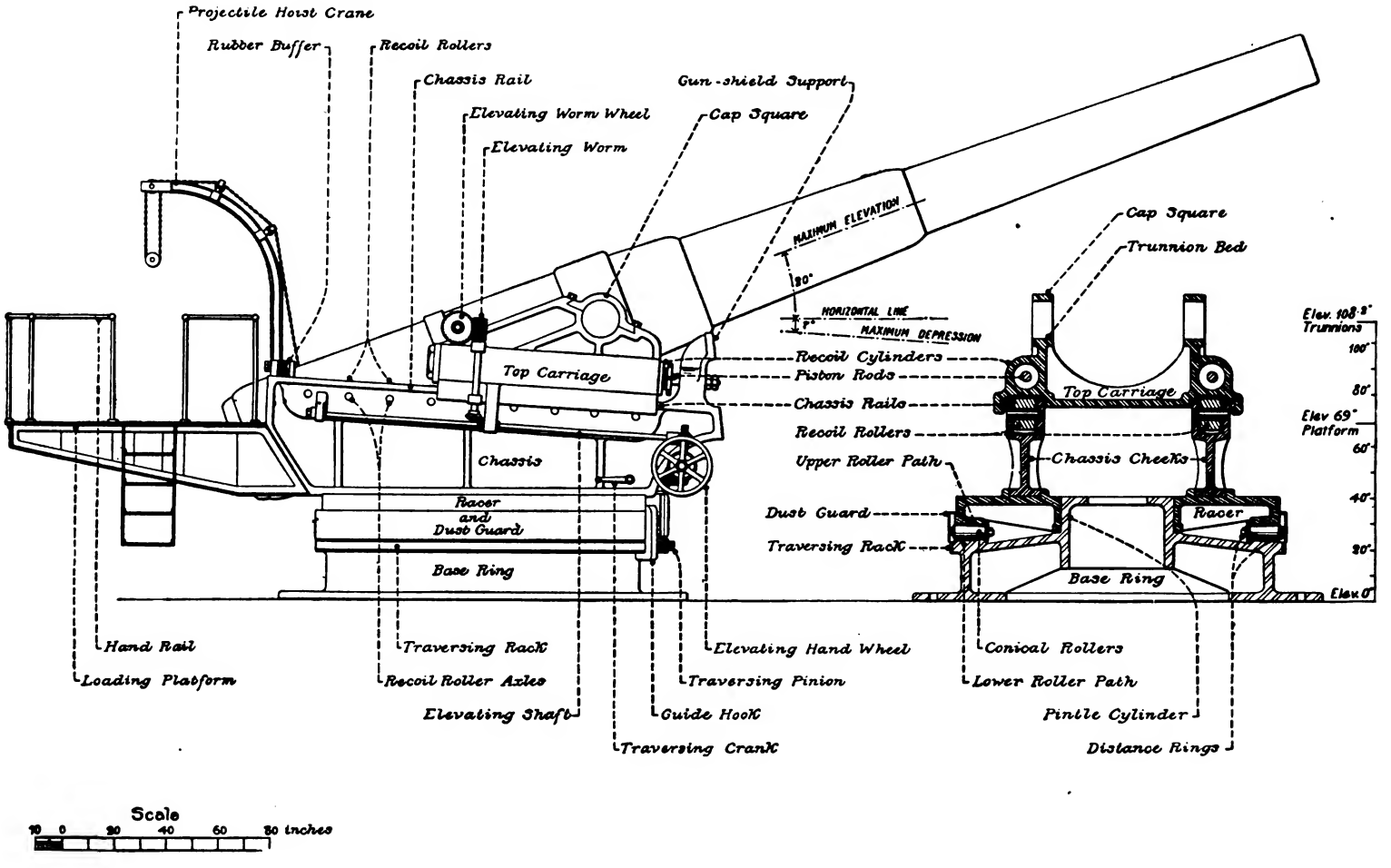

Digitized by Google

Digitized by Google

TRAVERSING GEAR.

Traversing is effected by means of a shaft having a crank at each end. To the middle of this shaft is attached a worm. This engages in a worm wheel on a vertical shaft having, at its lower end, a pinion which meshes into the rack cut on the base ring. The piece can be traversed through the entire circumference.

SHOT HOIST.

The projectile is raised to the loading position by means of blocks attached to a crane. The crane is held by two lugs on the left side of the chassis. A manila rope passes over the guide pulleys of the crane to the drum, which is driven by a spur gear and pinion. A ratchet wheel and pawl are provided for holding the shot at any time during the hoist.

Provision is made at the rear end of the right chassis for the chassis sight. A platform attached to the chassis affords standing room for operating the breech mechanism, while loading and cleaning. A sliding plate in the platform is attached by rods to the top carriage and moves with the top carriage from and into battery so that it can not be struck by the gun in recoiling.

CARE OF THE CARRIAGE.

When the carriage is in use the bearing parts should be frequently oiled. The rollers, roller paths, and pintle should be kept clean and well lubricated.

If the carriage is to remain unused for short intervals all bright parts, including the breech of the gun, should be covered with a coat of commercial cosmic. This must be renewed occasionally. The carriage should be traversed from time to time.

If the carriage is to remain unused for a long period, remove all the oil from the recoil cylinders, and paint all exposed bright parts with the following mixture, applied hot, viz:

White lead	1 pound.
Beeswax	¾ ounce.
Beef tallow, rendered	4 pounds.

With less than this amount of tallow the mixture will peel off too easily. Any other mixture that can readily be removed will answer the purpose. The rollers and roller paths should be carefully cleaned and covered with cosmic. The space between the dust guard and the base ring should be filled with watse or oakum to keep out dust and moisture.

The cylinders occasionally need repacking, for which purpose ¾-inch braided-hemp packing soaked in oil and graphite can be used.

The recoil of the top carriage should be about 4 feet, and neutral oil, or some other oil of about the same density, should be used in the cylinders. A denser fluid will shorten the recoil and bring a somewhat greater strain on the carriage.

The above directions also apply in general terms to the 8 and 10 inch carriages.

The total weight of the carriage is 112,804 pounds, distributed as follows:

	Pounds.
Top carriage	17,590
Chassis and upper roller path	46,670
Lower roller path	34,120
Platform, crane and other parts	14,424

The weight of the gun and the moving parts of the carriage is about 86 tons.

THE GUN-LIFT CARRIAGE FOR THE 12-INCH B. L. RIFLE.

The only adopted model of carriage for the 12-inch rifle, besides the barbette, is that designed for use in the gun lift.

Digitized by Google

It is not the province of this work to describe the gun lift, nor would it be proper to do so, since the details of this modern fortification have not been made public. For a proper understanding of the carriage, however, it is necessary to know the principle upon which this emplacement is constructed. It consists simply of two or more wells, containing elevators of enormous power, which raise and lower massive iron platforms, each carrying a 12-inch gun and carriage. The gun is loaded at the bottom of the well, lifted to the roof of the fortification, which has the form of an ordinary barbette battery, fired, and again lowered to the bottom of the well, where it is entirely protected, except from high-angle fire.

THE CARRIAGE.

The gun-lift carriage is composed of a carriage body resting, through the medium of twelve recoil rollers, upon an inclined chassis fixed to a circular bed or upper roller path, and of a bedplate or lower roller path, upon which rest all the movable parts through the medium of a ring of conical rollers. The top carriage, chassis cheeks, and upper roller path are of cast steel; the bedplate is of cast iron.

The carriage resembles, in many features, the 12-inch barbette carriage, but the recoil rollers are journaled in deep grooves of the top carriage instead of being located in the chassis, and the top carriage has a third or middle cylinder at the bottom. The piston rods of the recoil cylinders are secured to lugs on the rear ends of the chassis and the piston of the third cylinder to the transom of the chassis.

In the position "from battery" the trunnions of the gun are over the axis of the pivot, so that the weight is equally distributed over the lift.

The hydraulic brake is arranged so as to fulfill the condition of holding the piece from battery after firing, in order to effect the loading by hydraulic power. This condition has been obtained by the following arrangement: The two brake cylinders, situated in the top carriage above the rollers, communicate with the third cylinder in the lower part of the top carriage by a passage provided with an automatic valve and a small by-pass valve worked by hand. The piston rods of the hydraulic cylinders are fastened to lugs at the rear of the chassis.

As the recoil cylinders are forced back over the piston heads the piston rods enter the cylinders, thus displacing a certain amount of liquid that finds egress through the connecting pipes and valve box into the third cylinder, which, being attached to the top carriage, has also moved back, leaving a space in rear of the plunger equal to the combined volumes of the two rods that have entered the recoil cylinders.

As the cross section of the plunger in the third cylinder equals the sums of the cross sections of the two pistons in the recoil cylinders, the volume displaced remains constant, and all the interior space is filled by the liquid, whatever the position of the carriage on the chassis.

When the carriage has finished the recoil the automatic valve in the valve box prevents its return to battery by closing the communication between the recoil cylinders and the third cylinder. To return the carriage to battery the small valve in the valve box at the rear of the third cylinder is opened, which permits the return of the liquid into the recoil cylinders, and the carriage returns to battery, the inclination of the chassis rails being 4 degrees.

Belleville spring buffers in front reduce the shock of returning to battery, and similar buffers, seated in recesses in the rear lugs of the chassis, are provided.

The hydraulic brake is of nearly constant resistance.

THE THROTTLING BARS.

The cylinders are lined with bronze. The throttling bars are four in number—two for each recoil cylinder on opposite sides of the axis. They are screwed into the rear cylinder

Digitized by Google

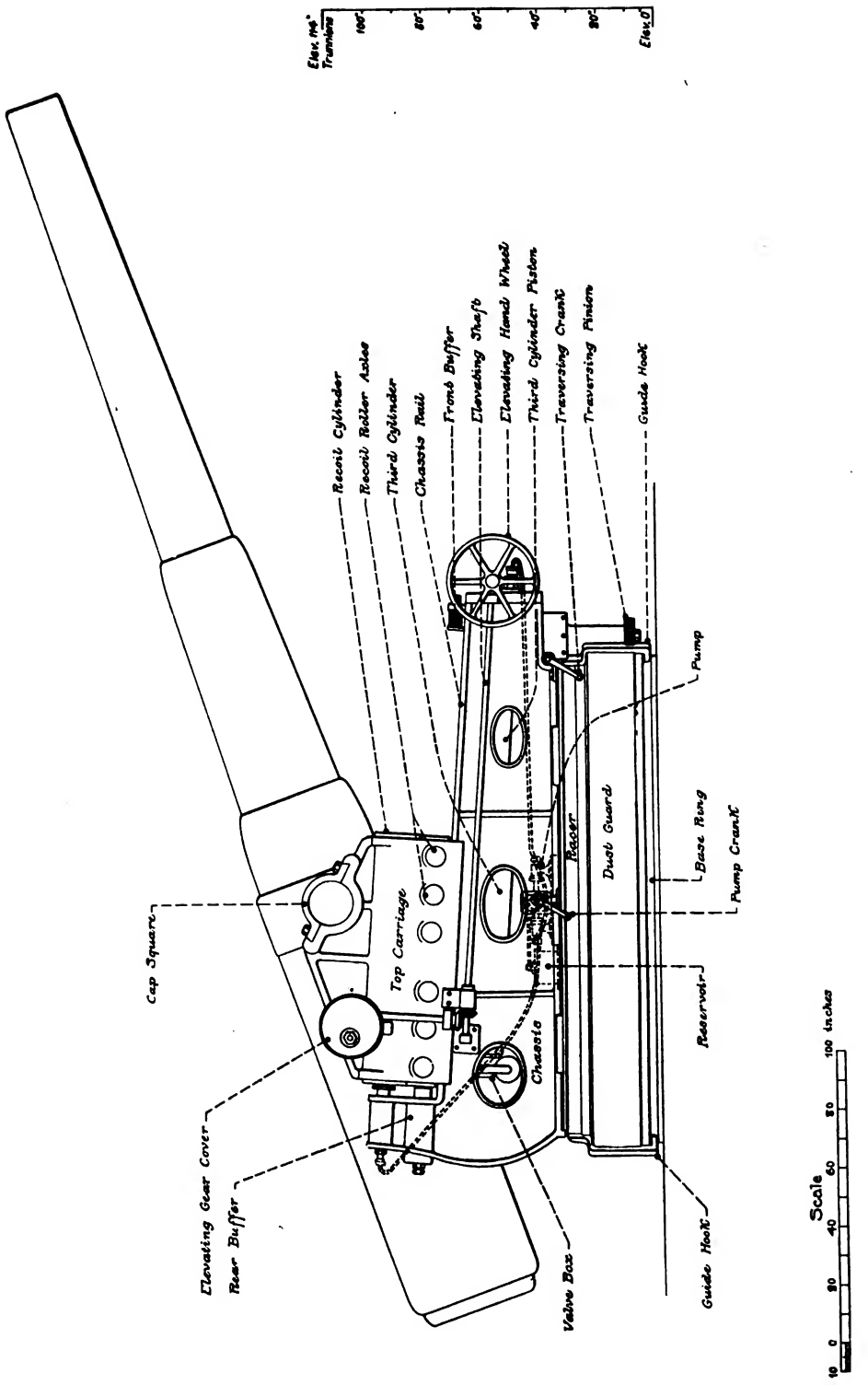

Fig. 64
12 inch B.L. Rifle. - Steel.
Gun Lift Carriage

Digitized by Google

Digitized by Google

heads and let into holes in the front cylinder heads. They are thus supported only at the ends. The bars are made from cylindrical rods by planing away the rods on two opposite sides in accordance with a calculated curve, thus leaving bars with flat sides and of varying cross section, except at the ends, which are full cylinders. The bars are inserted in the cylinders with the flat sides vertical. The piston heads are provided with two holes, situated on opposite sides of the axis. These holes taper from the outside toward the middle section, which has the same diameter as the full ends of the bars, allowing a working fit. At the extreme positions of the top carriage, the orifices in the piston heads are completely closed by the bars; at any other position they are more or less open, due to the varying amount by which the bars have been cut away, thus leaving a passage for the escape of the fluid.

The left-hand piston rod is bored out along its axis to a diameter of 1.6 inches up to a short distance from the piston head. At this point two small suction holes are drilled radially into this interior cavity. This piston rod is extended to the rear for a union to the hydraulic pipe connections. The right piston rod is solid.

The piston or plunger of the third cylinder is bored axially its entire length. Its front end, screwed into the front transom, is arranged for pipe connections.

A hand pump actuated by a through shaft with crank handles on the right and left sides of the chassis is secured to the upper roller path on the left side, and communicates on one side by piping with the third cylinder, and on the other with the recoil cylinders, and by branch piping to a small reservoir of oil to compensate for loss by leakage.

The valve action of the pump is arranged to exhaust the oil from the recoil cylinders and force it into the third cylinder.

As soon as the gun disappears after firing, the top carriage is brought against the rear buffers in the exact position "from battery" by means of this hand pump. The "from battery" for cleaning is effected with the same apparatus.

THE HYDRAULIC CONNECTIONS AND ACTION OF VALVES.

The hydraulic connections and valve arrangements are as follows:

A copper pipe is connected at the rear end of the left piston, which is bored out to nearly the piston head, and provided with radial suction holes as described.

From this rod the pipe passes down to the pump and connects to the two lower nozzles. A branch between these runs back to the reservoir, which is provided with a valve to prevent any back pressure in the reservoir. Another system of piping connects to the rear upper nozzle of the pump, then to the front nozzle, and from there leads to the front transom and connects at the front end of the piston of the middle cylinder, which, it will be remembered, has been bored through axially.

To the rear end of the third cylinder, and in connection with it, is the valve box. In this are seated two valves. The large or main valve, located in the main passage, is open only to pressure coming from below, and closed against pressure coming from the third cylinder. A second valve, seated at the bottom of a side passage, or by-pass, is operated only by the handle on the left side of the chassis, and then opens connection between the third cylinder and the main passage in the valve box, below the automatic valve above mentioned.

From the sides of the valve box copper piping passes up to the rear ends of the recoil cylinders, putting them in connection with the valve box, below the automatic valve.

The valve box and the two connecting pipes just referred to are part of the recoil system.

The pump and its connections serve only to bring the carriage exactly to the loading position, as before described, or to move the carriage back for cleaning.

Digitized by Google

Supposing the piece in battery, upon firing, the fluid action is as follows (see diagram):

The oil passes from the front to the rear ends of the recoil cylinders through the orifices of the pistons, thence, by connecting pipes, to the valve box, the pressure opens the main valve and the fluid passes into the rear end of the third cylinder. As soon as the recoil ceases the main valve closes in the valve box, and the carriage is retained "from battery." The check valves in the pump and reservoir prevent any fluid passing through those parts.

The hand pump is now worked to bring the piece accurately to the loading position. The fluid passes into the left piston rod, through the suction holes, thence by the pipe connections through the pump and to the front end of the piston of the third cylinder and through the bore of the piston to the rear end of the cylinder, increasing the pressure there and forcing the top carriage farther back.

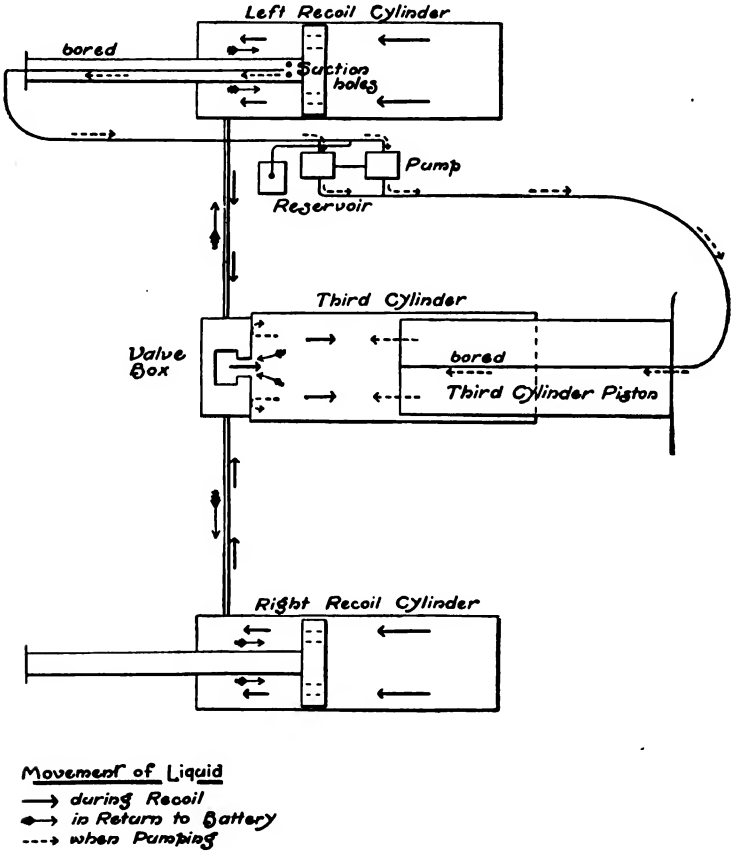

Fig 65. Hydraulic Connection and Valve Action of Gun-lift Carriage for 12-inch Breech-loading Rifle.

By opening the by-pass valve at the bottom of the valve box, the oil passes from the third cylinder into the valve box below the automatic valve, thence by the connection pipes to the recoil cylinders, and the carriage returns to battery.

This by-pass or plunger valve works against a spiral spring and is actuated by a starting shaft with a cam at the end This shaft passes up through the left chassis and is operated by a handle provided with a spring stop on the outside of the chassis. At the upper end of the shaft is a safety device in the form of an involute spring, against which the shaft must

Digitized by Google

be operated to actuate the by-pass valve. This prevents the by-pass valve from being accidentally left open.

THE ELEVATING MECHANISM.

This is similar in its character to that of the 12-inch barbette, except that the square shaft is actuated through the medium of two pairs of miters instead of by a spiral gear The shaft for the worm wheel is enlarged where the wheel engages upon it, and is turned to a taper and ground to fit the worm wheel, thus forming a friction clutch. The holding power of this clutch is regulated by two pairs of Belleville springs placed on the shaft outside of the worm wheel, against which they are compressed by adjusting nuts. This arrangement prevents strain on the elevating gear during firing by allowing the shaft to move within the worm wheel.

THE TRAVERSING MECHANISM.

This is similar to that of the 12-inch barbette, except that the worm shaft is driven by a pair of spur gears on each side of the chassis. The training rack is of soft steel, bolted on the bedplate in four quarter sections, and the pintle is covered with bronze.

The elevation indicator and standard for chassis sight are similar to those of the 12-inch barbette carriage.

The carriage admits of an elevation from minus 7 degrees to plus 20 degrees, and all-around traversing.

The estimated weights of the principal parts of the gun-lift carriage for the 12-inch breech-loading rifle are as follows:

	Pounds.
Top carriage	20,100
Chassis	14,400
Racer	20,850
Base ring	26,050
Accessories	27,400
Total	108,800

THE 12-INCH B. L. RIFLED MORTARS.

Seacoast mortars are of 12-inch caliber, and of two principal patterns—the all-steel mortar, model of 1890, and the cast-iron mortar hooped with steel.

THE 12-INCH B. L. STEEL MORTAR, MODEL 1890.

The all-steel mortar is composed of a tube, jacket, three A hoops, two C hoops, one D hoop, the breech bushing, and the various parts constituting the breech mechanism. It is of the breech-insertion pattern, with a shoulder on the tube abutting against a corresponding shoulder in front of it in the jacket. On the exterior of the jacket there is a second shoulder, against which the front face of the trunnion hoop has its bearing. These shoulders prevent the forward movement of the tube or rearward motion of the jacket. The longitudinal stress upon the front face of the obturator is transmitted to the jacket through the bushing. The latter is screwed into the jacket compressing a copper packing ring between its front face and the breech end of the tube.

The A hoops are shrunk upon the jacket, the A1 hoop being the one immediately in front of the trunnion band, which is the A2 hoop.

The C hoops are shrunk upon the tube in front of the jacket. The D hoop covers the joint between the jacket and C1 hoop and abuts against a shoulder on the former.

Digitized by Google

The breech mechanism differs from that of the other seacoast cannon in the omisson of the breech plate with resulting changes. It consists of the breechblock, face plate, rack, translating roller, obturator, tray, hinge block, hinge pin, tray latch, securing latch, vent cover, and associate parts.

In general features the breechblock is similar to those for other seacoast cannon. It is slotted on three sectors and has a steel handle riveted to the face plate.

The face plate conforms in shape to the rear face of the block except that it has a radial arm extending from its upper arc. From its form the face plate is sometimes called the banjo. It is attached to the block by five screws and a dovetail tenon fitting in a transversely-slotted seat. The arm has a rectangular mortise cut parallel to the face of the breech through the upper end, in which two gears are housed. The lower smaller one is mounted upon an axle, one arm of which extends through the rear wall of the mortise and has the rotating crank mounted upon it. This gear meshes into a larger one immediately above it, mounted upon a second journal, also having its bearings in the walls of the mortise. These bearings are bushed with bronze. Upon the latter journal, beyond the front face of the arm, a pinion is mounted, which meshes into a circular rack, geared on the interior, bolted upon the rear face of the breech in a recess cut out for the purpose, so that its rear face is flush with that of the breech. This rack has the same exterior diameter as the rear face of the mortar and the recess is large enough to permit the revolution of the rotating pinion, which meshes into the rack. Rotation of the crank and its gear turns the larger gear and the rotating pinion, which, traveling in the fixed rack, causes the face of the block to revolve.

The spiral catch for the rotating crank consists of a housing, stud, stud spring, and nut. The housing is screwed into the front side of the face-plate arm and extends through the same. Upon this extension a hollow nut is screwed. The stud is mounted in a cylindrical recess in the housing. About its shank there is a spiral spring with its front bearing at the bottom of this recess and its rear bearing against the front face of the stud head. The rear face of the stud head is crowned, enabling the crank to pass it by compressing the spring. This crowned head fits in a seat on the front face of the crank arm and latches the rotating crank.

The obturator is similar to that used in the other seacoast cannon. The gas check consists of the pad, the front and rear exterior split rings and the rear interior split ring, and the filling-in disk.

The tray and translating roller are also similar to those used in the heavy guns. The hinge pin is mounted in ears cut in a hinge block recessed in the face of the breech, to which it is secured by four large screws. The tray latch is mounted on the underside of the tray. It engages in the tray-latch catch when the tray is swung against the face of the breech. The catch is an eyebolt screwed into the face of the breech with a rectangular eye, into which the nose of the latch drops. It is held latched by a vertical spring bolt, with one end on the upper side of the latch and the other abutting against the translating roller when the latter is in its forward position.

When the tray is revolved so as to fully uncover the breech it is secured by a latch mounted in a mortise in the hinge block on a screw bolt passing through it into the block. The nose of this securing latch engages in a catch mounted on the web of the tray. It is released by lifting the lever handle at its left end.

The vent cover is mounted in a recess on the front side of the face plate. It consists of an irregularly-shaped bar made in two parts joined by a half dovetail and screw. Projecting from its front face at the upper end there is a stud which travels in a groove in the face of the breech concentric with the axis, except at its end, where, by its eccentricity, it acts when the block is locked to lift the vent cover from over the vent.

Digitized by Google

Fig. 66- 12 inch B.L. Rifled Mortars.

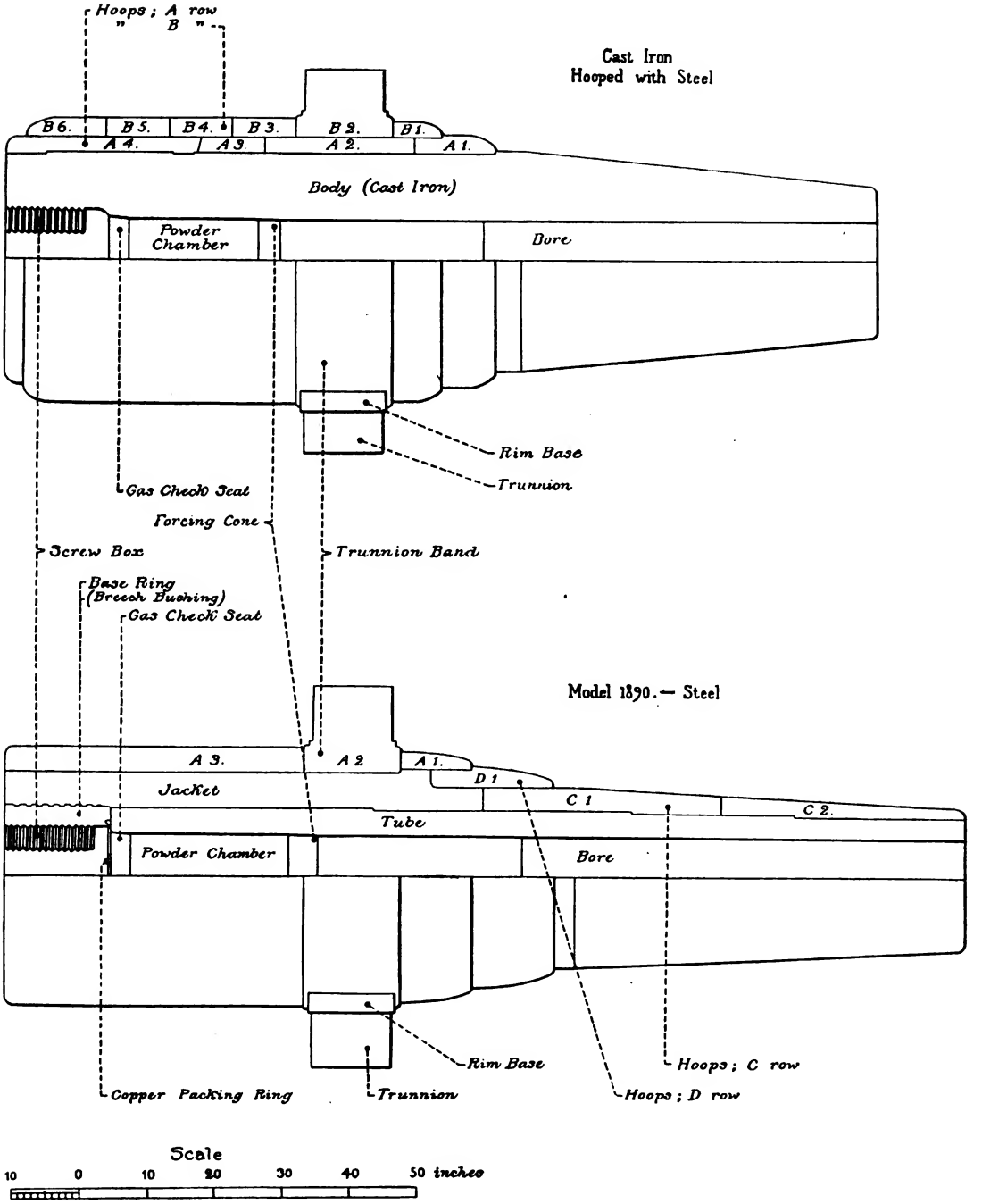

Digitized by Google

Digitized by Google

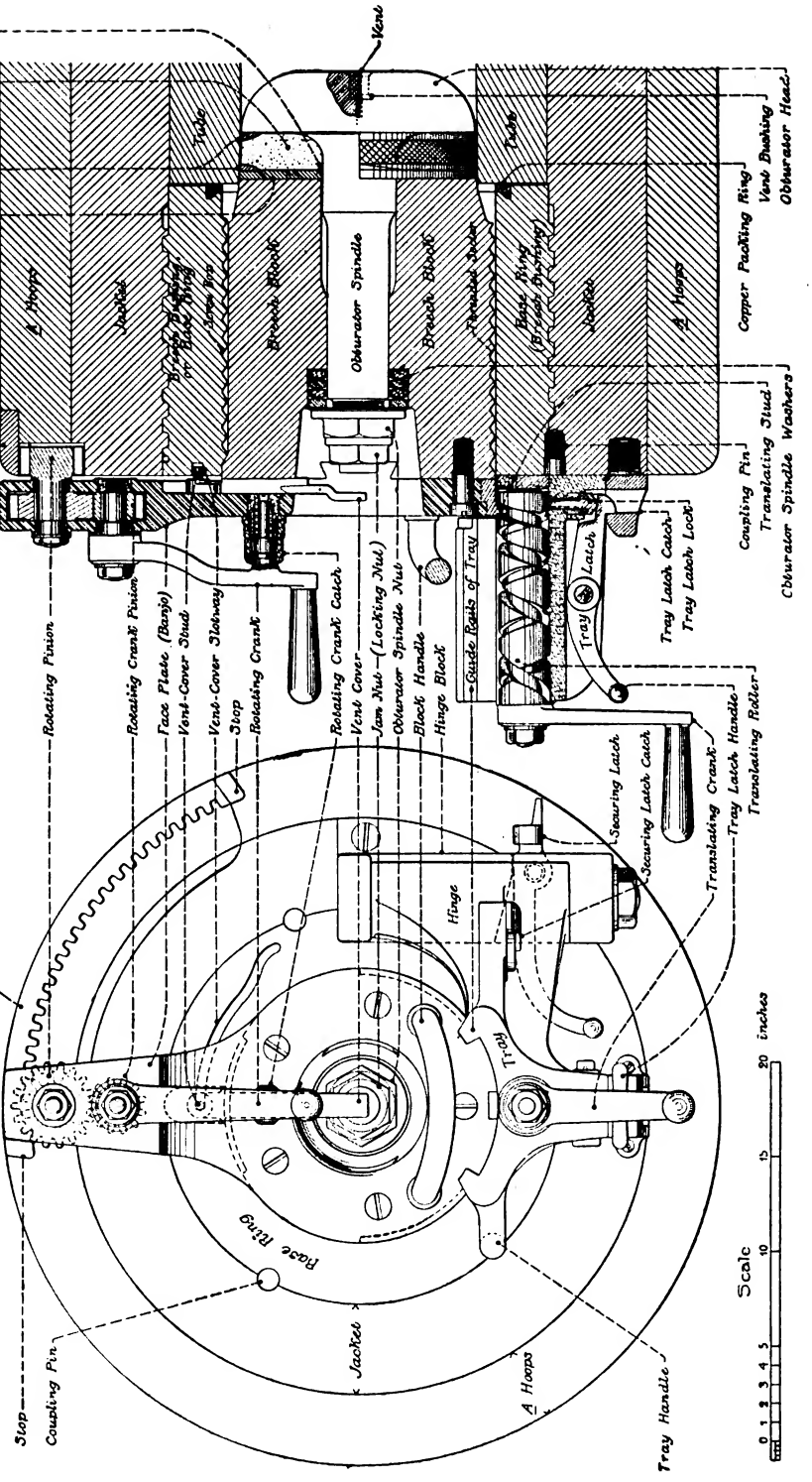

Fig.67 – 12 inch B.L.Rifled Mortar.– Steel, 13 tons

Breech Mechanism

Block Unlocked. Recoil for Withdrawal

Digitized by Google

THE 12-INCH B. L. CAST-IRON MORTAR, HOOPED WITH STEEL.

The cast-iron mortar, hooped with steel, consists of a cast-iron body extending from the face of the breech to the face of the muzzle, reenforced by two rows of short steel hoops. The A row extends from 29¼ inches in front of the axis of the trunnions to the breech. The trunnion band is the second of the B row. These hoops are arranged to break joints.

The rifling and the breechblock recess are cut directly in the cast-iron body.

The breech mechanism is, in general, the same as that on the steel mortars. There are two block handles, one on each side of the bottom of the face of the block in the unlocked position, and the threads have a ratchet section instead of the "V."

	12-inch breech-loading mortar, cast iron, hooped with steel.	12-inch breech-loading mortar, steel.
Weight ---------- pounds	31,920	29,120
Weight ---------- tons	14.25	13
Total length ---------- feet	10.75	11.76
Length of bore ---------- calibers	9	10
Maximum diameter of breech ---------- inches	41.75	38
Diameter of muzzle ---------- do	22.5	21
Diameter of trunnions ---------- do	12	12
Length of trunnions ---------- do	6	8
Distance between rimbases ---------- do	44	40
Distance of axis of trunnions from muzzle ---------- do	79.1	90.125
Rifling:		
Number of grooves ----------	68	72
Width of grooves ---------- inch	0.379	0.3736
Depth of grooves ---------- do	0.07	0.06
Width of lands ---------- do	0.175	0.150
Twist of rifling ---------- calibers	1 in 40 to 1 in 25	1 in 40 to 1 in 20
Powder chamber:		
Diameter ---------- inch	12.4	12.5
Length ---------- do	15.75	20.8
Capacity ---------- cubic inch	1,990	2,036
Total capacity of bore ---------- do	12,554	13,947
Powder charge:		
Kind of powder ----------	VM Brown pris.	VM Brown pris.
Weight of charge ---------- pounds	80	105
Density of loading ----------	1.1128	1.1026
Projectile:		
Weight of projectile (filled) ---------- pounds	800 1,000	800 1,000
Ratio of weight to weight of piece ----------	1/40	1/36
Weight of bursting charge ---------- pounds	29 41	Steel D. P. shell.
Length of projectile ---------- calibers	3 3.8	3 3.8
Sectional density $= \frac{W}{d^2}$ ----------	5.5556	5.5556
Travel of projectile, in bore ---------- calibers	7.66	8.225
Muzzle velocity ---------- foot-seconds	1,020	1,140
Pressure per square inch in powder chamber ---------- pounds	27,500	30,000
Muzzle energy ---------- foot-tons	5,769.7	7,206.9
Penetration in steel at muzzle ---------- inches	8.2	9.7
Forgings:		
Total weight ---------- pounds	36,220	34,884
Weight of tube ---------- do	21,178	7,666
Weight of jacket ---------- do	----------	9,840

Digitized by Google

The gear rack has its teeth cut on the exterior instead of on the interior of the arc, as in the steel mortar. The crank arm for the cast-iron mortar is 9.4 inches, while that for the steel mortar is but 8 inches in length.

The principal weights, dimensions, etc., of the 12-inch breech-loading mortars are given in the preceding table.

PROVISIONAL RANGE TABLE FOR 12-INCH B. L. MORTAR, CAST IRON, STEEL-HOOPED.

800-POUND PROJECTILE.

Range.	Angle of projection.	Time of flight.	Powder.		Initial velocity.	Pressure.	Density of loading.
			Kind.	Weight.			
Yards.	*Degrees.*	*Seconds.*	*Brown prismatic.*	*Pounds.*	*Feet per second.*	*Pounds per square inch.*	
9,039	45	42.8	VM.	76	1,020	26,730	1.0414
7,901	60	52.6					
7,901	45	39.9	VM.	67	942	21,392	0.9169
6,861	60	48.7					
6,861	45	37.0	VM.	59	871	17,178	0.8089
5,949	60	45.3					
5,949	45	34.3	VM.	52	804	13,729	0.7116
5,142	60	41.9					
5,142	45	31.8	VM.	45¾	742	10,966	0.6259
4,456	60	38.9					
			Sphero-hexagonal.				
4,456	45	29.5	MW.	37	687	20,539	0.5056
3,865	60	36.2					
			1,000-POUND PROJECTILE.				
4,000	45	27.8	MW.	38¾	642	23,616	0.5304
3,460	60	34.0					
3,460	45	25.7	MW.	34¼	595	19,088	0.4697
2,983	60	31.4					
2,983	45	23.9	MW.	30¼	550	15,315	0.4141
2,570	60	29.1					
2,570	45	22.2	MW.	26½	507	12,194	0.3636
2,177	60	26.6					
2,177	45	20.3	MW.	23½	469	9,804	0.3210
1,911	60	25.1					
1,911	45	19.2	MW.	20½	433	7,839	0.2825
1,636	60	23.2					
			800-POUND PROJECTILE (supplementary).				
4,723	45	30.4	MW.	38¾	708	22,335	0.5304
4,095	60	37.2					
4,095	45	28.2	MW.	34¼	656	18,052	0.4697
3,543	60	34.4					
3,543	45	26.2	MW.	30¼	606	14,484	0.4141
3,050	60	32.2					
3,050	45	24.2	MW.	26½	559	11,532	0.3636
2,616	60	29.6					
2,616	45	22.2	MW.	23½	517	9,272	0.3210
2,263	60	27.4					
2,263	45	20.8	MW.	20½	477	7,414	0.2825
1,946	60	25.4					

CHARACTERISTICS OF POWDER.

VM., lot 7 ..... { log. $a = 0.08948$ / log. $\beta = 9.63348$ | MW ..... { log. $a = 0.30750$ / log. $\beta = 9.99370$

NOTE.—Ranges intermediate to those indicated in the first column are obtained by varying the angle of elevation between 45° and 60°.

Digitized by Google

THE CARRIAGE FOR THE 12-INCH B. L. R. MORTARS.

These mortars are mounted upon spring-return carriages. They are intended to be fired between 45° and 75° elevation; hence the carriages are not designed for horizontal fire.

The general design is that of a center-pintle carriage with a base ring, a live-roller traversing circle between upper and lower roller paths, and two side frames or cheek pieces resting upon a racer, sustaining hydraulic cylinders for controlling the recoil, and spring return cylinders to lift the mortar into battery.

These cheek pieces are united by a heavy transom. The mortar is sustained by two independent trunnion carriages, sliding at an angle of 50° upon rails projecting from the sides or cheek pieces.

Provision is made to traverse by hand power applied to winches, one on each side of the carriage. There is also a double elevating apparatus, one on each side, and a mechanical loading device for lifting the projectile to the horizontal axis of the mortar for hand ramming.

The base ring, cast of gun iron in one piece, rests immediately upon the foundation to which it is bolted by twenty-four 2-inch bolts. On its upper surface is the lower roller path for the live-roller ring. This consists of a system of twenty-four conical steel rollers mounted on the roller path, guided by an inner and an outer harness ring, by which they are separated circumferentially. These rings are of 1-inch wrought iron, 5 inches wide, made in two sections each, with ends bolted together. The rings are slotted for the trunnions of the rollers, and drilled for twelve separators and twelve separator bolts, alternately, by which they are kept concentric. A flange on the inner end of the rollers has an end bearing on the upper and lower roller-path flanges, by which the live-roller ring is kept concentric with the racer and base ring.

The racer, cast in one piece, rests freely upon the live-roller ring. Its lower surface is the upper roller path.

These roller paths are housed from dust on the interior by a sheet-metal dust-guard plate, fastened to the face of the inner lower flange of the racer by forty-four dust-guard plate screws, and by sheet-metal strips fastened to the top of the traversing-rack flange by fifty-four screws, and on the exterior by the outer lower flange of the base ring, overlapping, by 1¾ inches, the corresponding base-ring flange. These outer flanges, together with the bearing surfaces of the flanges on the inner ends of the rollers, constitute the pintle.

On a level with the top of the racer the azimuth circle, made in eight sections, is secured to the foundation by sixteen 2-inch foundation bolts. It is graduated so as to read on a 7-foot radius to three minutes of arc by a brass index finger, fastened to the racer by three screws.

The two side frames of gun iron are assembled on planed seats on the racer, each by twenty-one bolts through their bottom flanges. They are approximately right-angled triangles in shape. A hollow cylinder, at an angle of 50° with the horizontal, is cast in each side frame, in which is the column of recoil springs for returning the mortar to the position for firing. A slot in the side of these cylinders permits the entrance of brackets from the trunnion carriage, against which the upper ends of the columns of recoil springs abut. T-shaped rails, parallel to the axis of the spring cylinders, project from the edges of the slot. The trunnion carriage has its seat upon and slides over these rails. The spring cylinders are prolonged below the side frame by extension castings called the spring-cylinder extensions.

The column of springs in each cylinder is composed of two concentric coils wrapped in opposite directions, divided into short sections with a separator plate placed at the top and bottom of each section, in addition to which there is a bottom plate at the lower end of the column, and the adjusting-screw washer at the upper end. The adjusting screw has its seat

Digitized by Google

in this washer with a bearing in the trunnion-carriage bracket, and provision is made, by the motion of its nut, to adjust the tension of the column as desired.

If the steel mortar be mounted in the carriage ten sections of coiled springs, supplemented by eight and a half pairs of Belleville springs, are required in each spring cylinder. Eleven sections of coiled springs are required for the cast-iron mortar.

In placing the springs in the cylinders they are compressed upon an auxiliary bolt afterwards removed.

The two side frames are united and the carriage stiffened by a heavy cross transom, cast in one piece, and bolted to the frames by ten bolts and to the upper base ring by eight bolts.

A hickory block projects from its rear face near the top, and acts as a stop against the lower side of the mortar at its maximum elevation. A buffer pin seated in a recess at the central point of the top of this transom, cushioned by nine felt buffer washers under its head, protected by two sheet-iron washers, limits the depression of the muzzle.

The mortar rests in the trunnion carriages, which are steel castings mounted upon the slides of the side frames, with flanges clipped over the rails. These slides have their lateral surfaces lined with bronze. An arm extends from the outside upper end of each into the spring cylinder, and rests upon the column of springs, which supports the weight of the mortar and the trunnion carriages.

The seat of the trunnions is bushed with bronze doweled in place. Bronze caps cover the trunnions. Above each cap is a cast-iron block bolted in its seat at the top of the trunnion carriage by a through bolt with a nut and cotter pin. Between the cap and the blocking there is a buffer made of sixteen strips of felt with a sheet-metal strip on the bottom of the buffer and on top of each fourth strip. It is designed to reduce the shock in returning the mortar into position in battery. There is also a buffer at the bottom of the slides. An oil hole leads to the friction surface of the slides, through which oil may be applied. Covers for these holes protect them from dust. Under each trunnion is a hydraulic cylinder of 7¾ inches interior diameter, for checking the recoil; it is bolted to the side frame by two bolts through a flange near its top, and to the lower spring cylinder by two bolts through a flange near its lower end. These cylinders are fitted with three ½-inch steel piston rods, each with a bronze-covered piston near the central point of the rod fitting easily in its cylinder. The upper end of the rod is pinned in a socket in the lower end of the trunnion carriage by a taper key pin secured by a cotter. The piston rods work through hemp-packed stuffing boxes at each end. Parallel to the cylinder is a by-pass channel, connection with which is made by a hole at the upper end immediately below the gland. At proper intervals seven other holes .7 of an inch in diameter are drilled, connecting the channel with the cylinder. By-pass plugs are provided to close these holes to such an extent as may be properly proportioned to the force of recoil. These plugs are marked O, ¼, ½, ¾, and C, indicating the degree which the corresponding holes may be closed by them, thus controlling the flow escaping in front of the piston head. With full charges the arrangement of these seven plugs in the ports for the cast-iron mortar, from top to bottom, in succession, is closed, ½ closed, open, open, ¾ closed, closed, and closed. The arrangement for the steel mortar is closed, ½ closed, open, open, ½ closed, closed, and closed.

The lower ends of the two cylinders are connected by an equalizing pipe suspended under the upper base plate. Its function is to connect the space in front of the two pistons that the resistance of each may be the same. The cylinder cap has projecting from it into the upper end of the cylinder an annular piston, which is of a size to fit with small clearance into a corresponding recess in the upper face of the main piston head.

The force of recoil is taken up mainly by the resistance which the fluid offers to being driven through the holes, which are successively closed by the piston; and to a small degree,

Digitized by Google

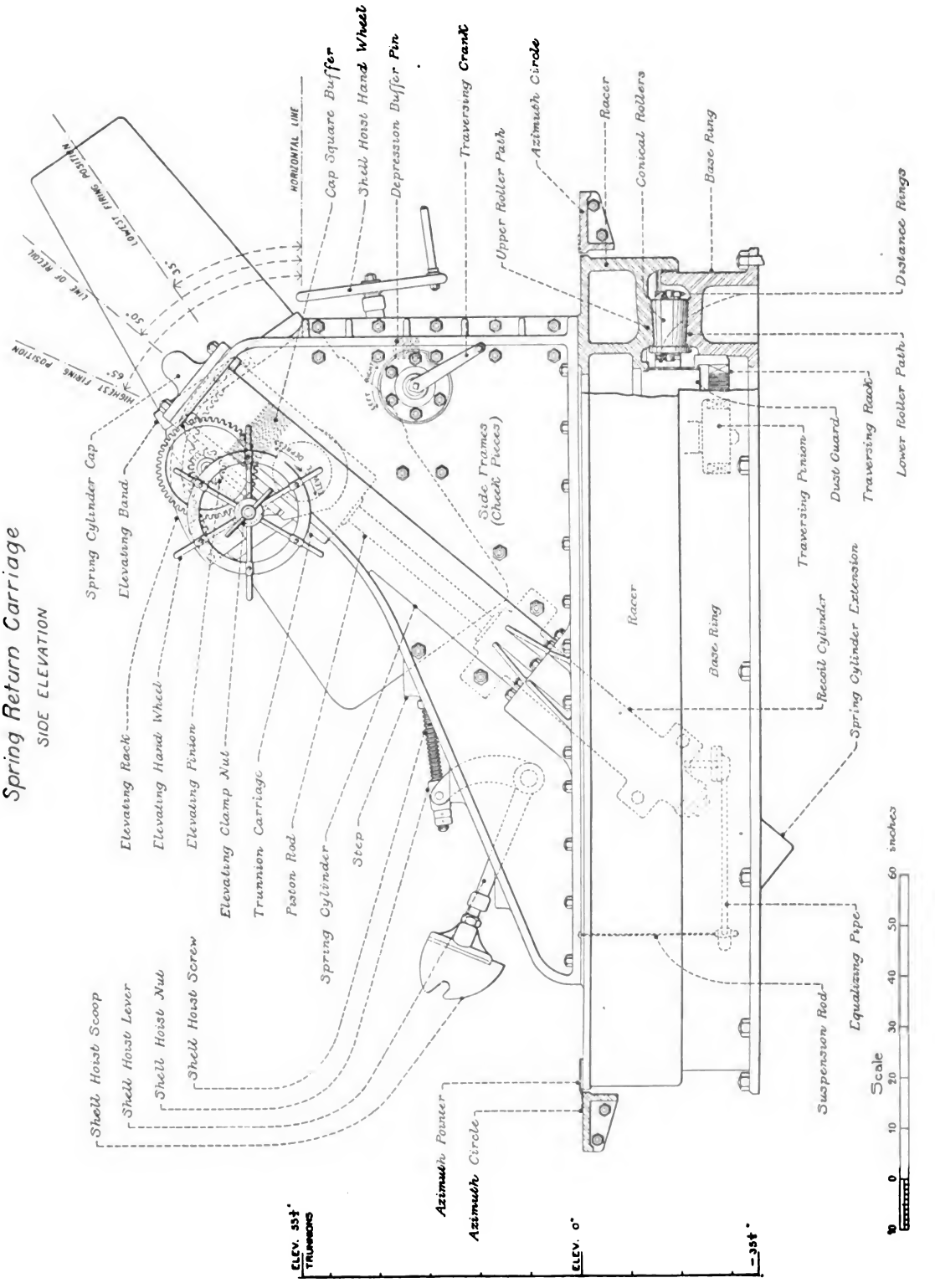

Fig. 68.—12 inch B.L. Rifled Mortar
Spring Return Carriage
SIDE ELEVATION

Digitized by Google

Digitized by Google

Fig.69.– 12 inch B.L. Rifled Mortar
Spring Return Carriage
PLAN

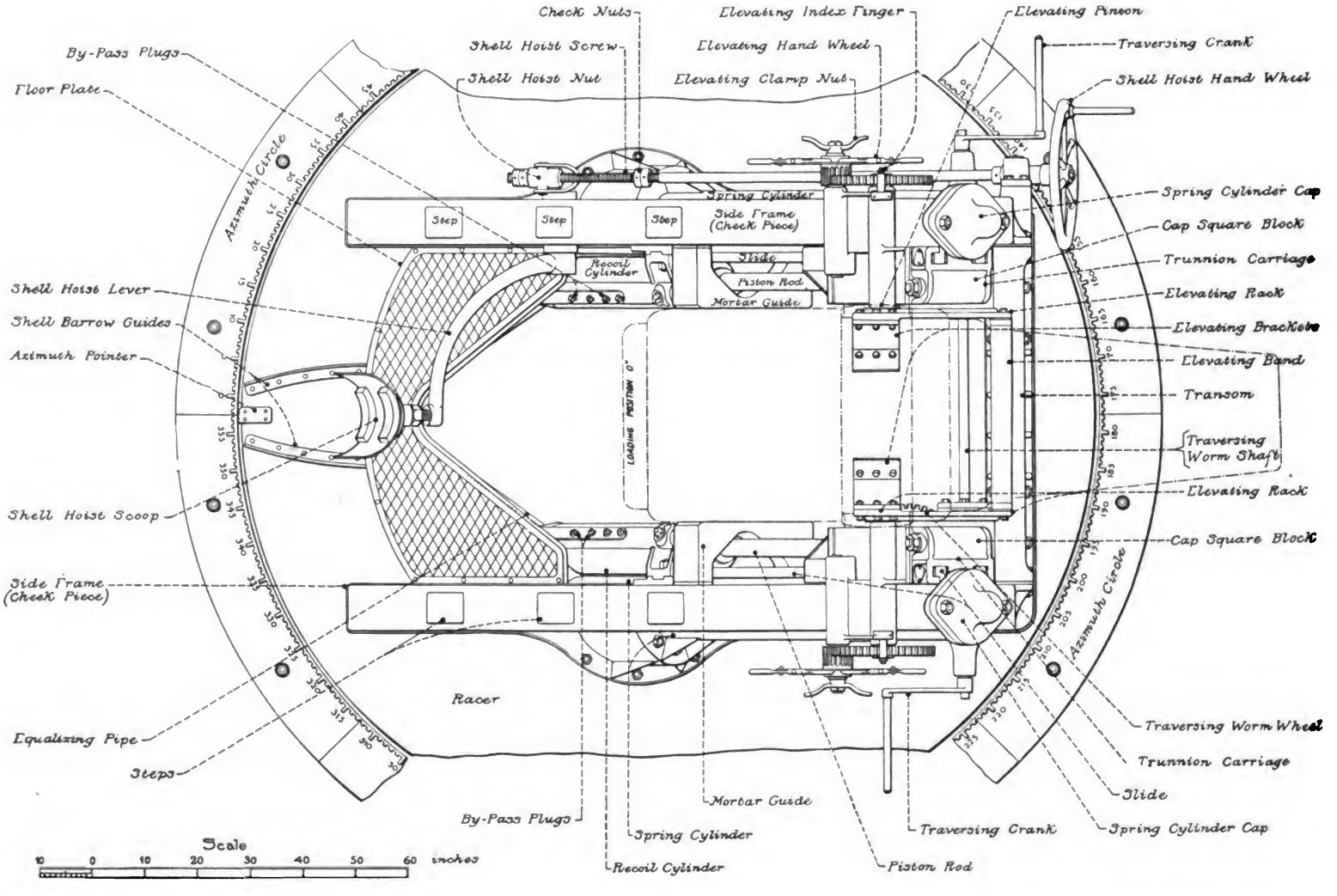

Digitized by Google

Digitized by Google

by the resistance to compression of the springs in the spring cylinders. The latter lift the mortar into firing position, returning the main piston to its upper position, whereby the annular piston enters the recess in the main piston, preventing the escape of the liquid except about the piston head, thus enabling the counter recoil as well as the recoil to be checked gradually.

Guide pieces, which are in contact with the cylindrical body of the mortar, resisting any tendency to lateral motion, are secured to the side frames by two bolts each. Parallel filling-in pieces are bolted to these if the carriage is used for the steel mortar.

The elevation is given to the piece by means of two independent bronze internally-geared segments, each secured at one end by three bolts to a bracket, which is attached to the mortar by three bolts, and at the other end by three bolts to a band shrunk upon the mortar in front of the A hoops. Wrought-iron pinions mesh into these segments, which pinions are mounted on the inner ends of shafts having their bearings in brackets bolted to the trunnion carriages by eight bolts each. A large gear at the outer ends of these shafts meshes into a second pinion on a second shaft, also mounted on the same brackets, parallel to the first. These last pinions, shrouded on one end, are cut on the prolongation of the hubs of handwheels to be operated by the gunners. A clamping nut mounted on the handwheel shaft, outside of the handwheel, clamps the handwheel when set up. A graduation for elevation may be marked on the large circular gear, the index finger being mounted on the elevating-shaft bracket. Direction plates marked "Elevate" and "Depress," with pointing arrows, indicate the direction in which the handwheel shall be turned.

The means of traversing consists in a cast-iron annular gear-rack made in six segments, bolted by forty-eight bolts, through its upper and lower flanges, on the vertical inside face of the base ring. A shrouded pinion, keyed on the lower end of a vertical shaft, meshes into this rack. On the upper end of the same shaft there is keyed a worm wheel, which is actuated by a worm on a horizontal through shaft mounted in three bronze-lined journal bearings. The right and left hand bearings are bolted on the outside of the side frames near their front edge, and the middle bearing to the inner end of the worm-wheel box. The worm wheel and worm are inclosed in a cast-iron box bolted on the inside of the right frame. It is covered by a cast-iron cap secured by screws.

The vertical shaft has an upper bearing in a bronze-lined journal seat in this box, and a bronze-lined lower bearing in a bracket bolted to the underside of the racer. It is protected by a wrought-iron sleeve mounted on hubs projecting from its two bearings. Power is applied to the system by two cranks mounted on the ends of the worm shaft. The handles of these cranks are covered with loose brass sleeves. Two plates attached to the side frames by screws, indicate by arrows and the words "Right" and "Left" the direction in which to turn the cranks in traversing the muzzle to the right or left.

There are three steps secured to the inclined top face of the side frames by four screws each. In some carriages these are cast upon the frames. A removable cast-iron floor plate is attached, by nine screws, to the racer, between the side frames, at a convenient height for loading.

The loading apparatus consists of a projectile tray, mounted on the end of a curved lever, which is operated by a screw with great pitch. The shaft of this screw has one of its bearings in a swiveled sleeve, one of the journals of which has its seat in the outside of the left side frame near its front edge, and the other in a bracket bolted to the side frame. The second bearing of the screw is in a swiveled nut with journal bearings in a forked arm mounted within the side frame on a shaft passing through the latter. This shaft also has keyed to it within the side frame the curved arm, at the end of which is the projectile tray. These two arms act as a bell-crank lever to lift the shell and tray to the breech of the

Digitized by Google

mortar. The tray is made for the 1,000-pound shell and has a false bottom for use with the shorter 800-pound projectile.

The projectile is brought to the mortar in a 3-wheeled hand truck, which is run upon the racer between guides bolted thereto, in a position to be received by the projectile hoist. The ammunition is seated, with the mortar in a horizontal position, with a hand rammer.

The height of the axis of the trunnions is 4 feet 6 inches above the terreplein.

The fluid used in the recoil cylinders is a neutral oil. A mixture of meythl spirits, water, oil, and carbonate of soda may be used in cold climates. Care should be had before firing to see that the cylinders are full and the proper throttling plugs in place. The bearings should be kept well oiled with sperm or olive oil, and the glands in the recoil cylinders should be properly packed with hemp. All bolts should be kept up to a bearing.

CARE OF THE CARRIAGE.

Mortar carriages, being machines, require careful attention; and although in times of war they may be required to stand any amount of rough usage and bad weather, in times of peace and during intervals of inactivity during war it is absolutely necessary that they should be kept clean and maneuvered now and then to see that they are in order.

When using the carriage, the bearing parts must be oiled from time to time to prevent their becoming clogged, and the oil cups should at all times be filled with waste thoroughly saturated with lubricating oil. The rollers and roller paths must be clean and well oiled. The teeth of the worm gear of the traversing apparatus and the shell-hoist screw on the left of the carriage require special attention. If the carriage is required to remain unused for short intervals, the bright parts, including the breech of the mortar, should be covered with a thick coat of commercial cosmic; this must be looked after, and must be renewed from time to time.

If the carriage must stand for a long period, remove all the oil from the recoil cylinders through the plug in the equalizing pipe, which should be carefully replaced; then paint all the exposed bright parts with a mixture of white lead, tallow, and beeswax, applied hot, in the following proportions: White lead, 1 pound; beeswax, ¾ ounce; beef tallow (rendered), 4 pounds; with a less amount of tallow if the mixture peels off too easily.

The rollers and roller paths should be carefully cleaned and then covered with cosmic. The space between dust guard and strips should be filled with waste or oakum to keep out dust and moisture.

Leather gaskets should be kept in oil, to preserve them, and hemp packing must be kept on hand for use when required.

When the carriage is properly assembled and in good condition the elevating and traversing should be easily performed by one man.

The weights of the principal parts of the 12-inch mortar spring-return carriage are as follows:

	Pounds.
Base ring	16,500
Racer	25,000
Azimuth circle	4,000
Side frames of upper carriage	11,800
Transom for upper carriage	2,485
Recoil cylinders	2,100
Spring cylinders	2,100
Trunnion carriages	1,850
Distance rings	1,400
Other parts	23,751
Total	80,986

Digitized by Google

CHAPTER VII.

PROJECTILES.

All projectiles used in the United States land service, except canister, have practically the same form—a cylindrical body with a pointed head. The length of projectiles varies from 3 to nearly 4 calibers. The curve of the head is the arc of a circle, tangent to the corresponding element of the cylindrical body, and described with a radius of from 1½ to 2 calibers in length. Rotation is given by a compressible band of copper, slightly larger than the bore, near the base of the projectile.

The projectile for machine guns and mountain artillery have already been described in the chapters devoted to those subjects.

PROJECTILES FOR 3.2-INCH RIFLES.

Three kinds of projectiles are used for the 3.2-inch rifle—shell, shrapnel, and canister.

SHELL.

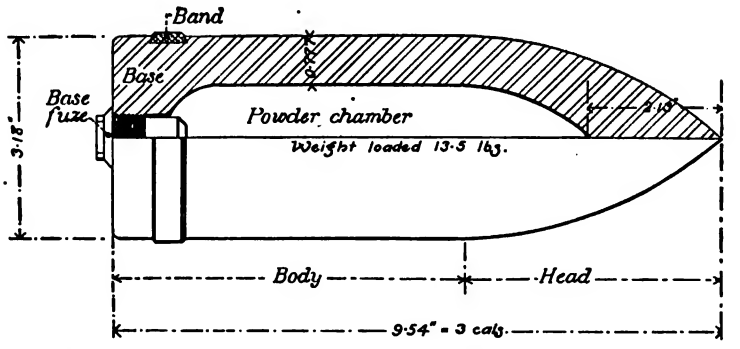

Fig. 70. Shell for 3.2-inch Breech-loading Rifle,

The shell is of cast iron. It is 3 calibers long, and the radius of the curve of the head is 2 calibers. It weighs 13 pounds and has a bursting charge of ½ pound, making the total weight 13½ pounds. It is rotated by a ½-inch rolled pure-copper band, seated in a dovetailed groove, 0.625 inch from its base. Scores are cut on the face of the seat into which the band is pressed, thus preventing rotation of the band on the shell. A base-percussion fuze is ordinarily used with the shell.

The common shells for the model of 1885 gun were made with the copper band 1.25 inches from the base. These are not adapted to the model of 1890, since the chamber space would be insufficient for the standard charge. To use this shell in the model of 1890 gun would necessitate a reduction of 2 ounces in the charge of powder and cause a loss of 45 foot-seconds in the velocity of the projectile.

Digitized by Google

SHRAPNEL.

There are two models of service shrapnel for this gun, viz, the Frankford Arsenal shrapnel and the electrically-welded shrapnel. The former is of cast iron, with the bursting charge in the point section; the latter is of steel, with the bursting charge in the base section.

The Frankford Arsenal shrapnel, exclusive of the filling, consists of three main parts—the head, body, and base.

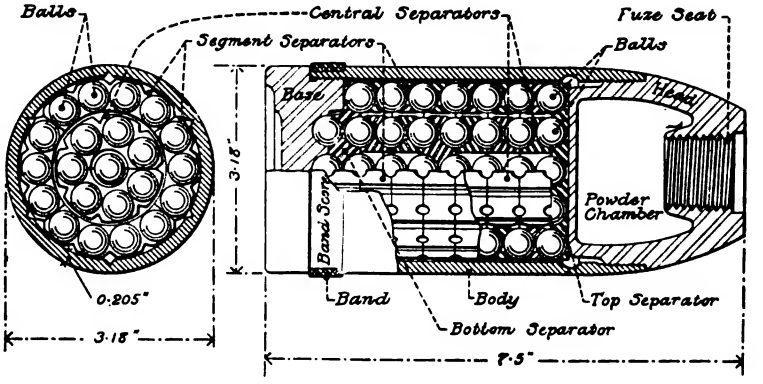

Fig. 71. Frankford Arsenal Shrapnel for 3.2-inch Breech-loading Rifle.

The head is a hollow casting machined on the exterior, and threaded so as to fit into the body. The point is threaded so as to receive the Frankford Arsenal combination fuze. The bursting charge of 2¾ ounces is contained in this section. The interior surface of the casting is lacquered to prevent premature ignition of the charge from friction.

The body is made of wrought-iron or steel tubing, machined on the outside and threaded at its two ends for the head and base. It is weakened for fracture by circular and longitudinal grooves cut upon its interior. It contains a charge of 162 balls, ½ inch in diameter, each of 8½ parts lead, hardened by 1 part antimony, 41 to the pound, arranged in seven layers of 22 each, with a bottom layer of 8. These are separated by cast-iron plates, with beds conforming to the shape of the balls.

The separators are designed to prevent the deformation of the balls under the shock of discharge and also to furnish additional fragments of effective size. The bottom separator plate has lugs projecting from it which fit into recesses in the base, preventing independent rotation of the charge within the body. The top separator, against which the head is secured in assembling, is flat on the upper side.

The base is of cast iron threaded to screw into the body and of sufficient strength to resist the shock of discharge and support the rotating band.

The band is of copper, shrunk upon its seat, which is roughened to prevent slipping.

The total weight of the shrapnel, exclusive of fuze, is 12 pounds 6½ ounces. The total number of balls and individual pieces in the shrapnel, complete, before bursting, is 200.

The following are the weights and dimensions of the Frankford Arsenal shrapnel:

Weight (without fuze or bursting charge)		12 lbs. 6½ ozs.
Total length (without fuze)	inches	7.5
Diameter of body	do	3.185
Exterior diameter of band	do	3.30
Width of band	do	0.5
Distance of band from base	do	0.625

Digitized by Google

Diameter of ball	inch	0.5
Weight of ball (41 to the pound)	grains	171
Number of balls		162
Weight of fuze		1 lb. ¾ oz.
Weight of powder charge	ounces	2¼
Weight, total, of shrapnel		13 lbs. 10 ozs.

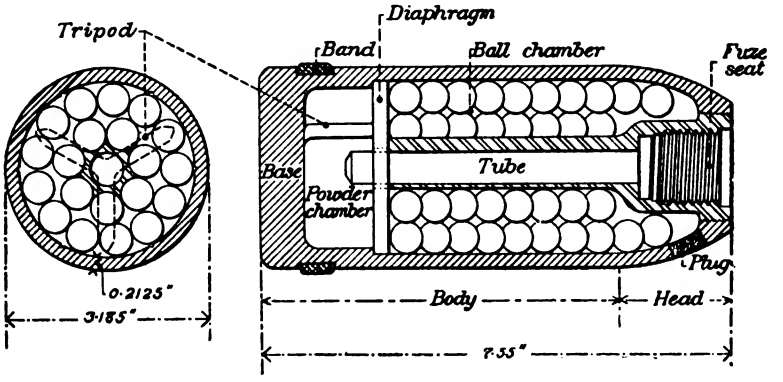

Fig. 72. Electrically-welded Shrapnel for 3.2-inch Breech-loading Rifle.

The electrically-welded shrapnel consists of a solid forged-steel case, machined inside and slotted with weakening grooves. The powder chamber is formed in the base by a wrought-steel diaphragm, .25 of an inch thick. A cast-iron tripod or support for the diaphragm is first pressed into the bottom of the case and the diaphragm is then forced down upon it. The edge of the diaphragm rests upon a slight shoulder on the interior wall of the case. A pressure of 50 tons is used in forcing the diaphragm home so there is no clearance in the fit of the tripod and the diaphragm to each other and to the base of the case.

A forged-steel head is then welded on the case. A cast-iron tube screwed into the head connects the fuze opening with the powder chamber. This tube also stiffens the projectile by making the diaphragm carry the weight of the head and fuze and contributes to the resistance of the shrapnel to upsetting when fired. Rotation is imparted by a soft copper band with undercut seat .625 of an inch from the base. The bottom surface of the seat is roughened. The shrapnel contains 170 lead bullets, 34 to the pound, which are introduced through a hole for the purpose near the head. The balls are held in position by a matrix of resin. The exterior of the shrapnel is lacquered.

The weights and dimensions of the electrically-welded shrapnel are as follows:

Weight (without fuze or bursting charge)		12 lbs. 5 oz.
Total length (without fuze)	inches	7.55
Length of head (without fuze)	do	1.95
Diameter of cylindrical portion	do	3.180
Diameter of head at front	do	2
Radius of head:		
Outside	do	3.5
Inside	do	3.29
Thickness of base	do	0.70
Thickness of diaphragm	do	0.25
Thickness of walls:		
Powder chamber	do	0.35
Cylinder	do	0.20
Head	do	0.20
Length of powder chamber	do	1.10

Digitized by Google

Length of ball chamber	inches	4.95
Depth of fuze seat to end of thread (minimum)	do	1.20
Total depth of fuze seat	do	1.50
Diameter of fuze seat within threads	do	1
Number of threads per inch		8
Interior diameter of tube (cast iron)	inches	0.50
Exterior diameter of band	do	3.30
Width of band	do	0.50
Distance of band from base	do	0.625
Diameter of ball	do	0.526
Weight of ball (34 to the pound)	grains	206
Number of balls		170

Shrapnel can be made to do duty for canister by reversing it in the gun, but should, of course, only be so used in an emergency.

CANISTER.

The canister used for the 3.2-inch rifle consists of a cylindrical case filled with cast-iron balls.

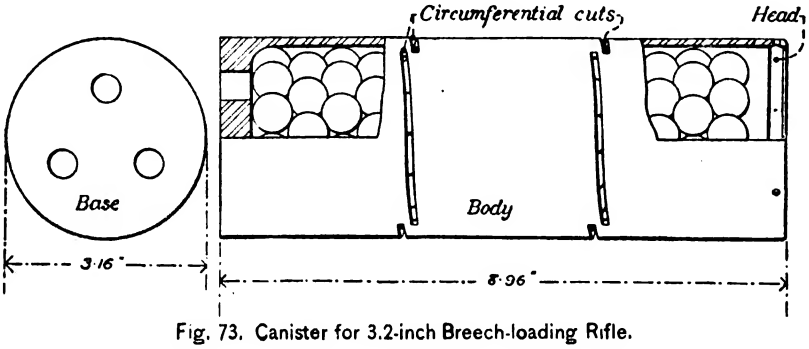

Fig. 73. Canister for 3.2-inch Breech-loading Rifle.

The case is made of malleable cast iron, machined to proper diameter and length. The bottom is ½ inch thick and is cast in one piece with the thin walls, which have a thickness of only .15 of an inch in rear and .1 of an inch in front. There are three holes in the bottom. Through the walls of the case at two points there are slightly oblique circumferential cuts with their ends overlapping, leaving sufficient metal between to make the case strong enough to stand loading and transportation.

The case contains from 222 to 226 cast-iron balls .625 of an inch in diameter, and is covered with a top of flanged tin plate .04 of an inch thick. If in filling the maximum weight (11 pounds 10 ounces) is reached before the case is full, the space is filled in with felt.

The canister, when finished, is given a coat of black lacquer. When the piece is discharged the case is broken into three nearly equal pieces, and at the same time the balls are blown out with a large cone of dispersion, having its apex at the muzzle of the gun.

The total weight of the 3.2-inch canister is 11 pounds 6 ounces minimum and 11 pounds 10 ounces maximum, distributed as follows:

	Pounds.	Ounces.
Balls	7	8
Case	3	14½
Cap or top		1½
Total (average)	11	8

Digitized by Google

PROJECTILES FOR THE 3.6-INCH RIFLE AND 3.6-INCH MORTAR.

The same kinds of projectiles are used for the 3.6-inch rifle as for the 3.2-inch rifle. Up to date only shells and shrapnel have been manufactured for this gun, but it is intended that canister shall also be used. The weight of the filled shell is 20 pounds, and the bursting charge is 14.5 ounces of powder. The same projectiles are used for the 3.6-inch mortar with the exception of canister. They require, however, a special fuze, which will be described under the head of fuzes. The initial velocity of the mortar is so low that the ordinary fuze would fail to be armed by the shock of discharge, and a more sensitive safety device must be used.

PROJECTILES FOR SIEGE CANNON.

The projectiles for the higher calibers can not, at the present date (December, 1894), be regarded as entirely settled.

For the 5-inch rifle and 7-inch howitzer, shell and shrapnel will probably be used, of the same form as those adopted for the field guns. In addition, there will be a steel shell for carrying high explosives.

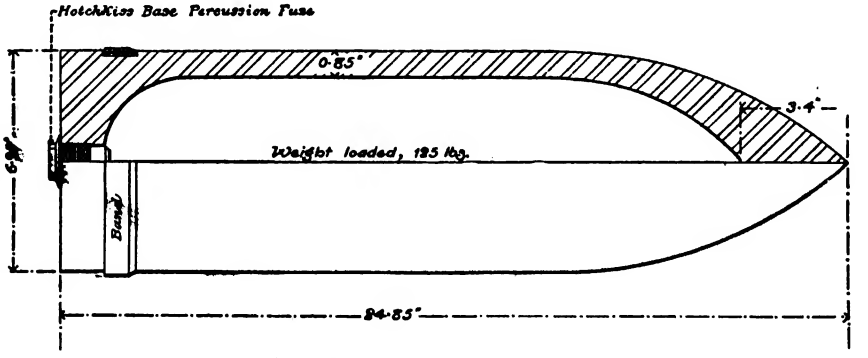

Fig. 74. High-explosive Projectile for 7-inch Breech-loading Rifled Mortar.

The weights of the filled cast-iron shells for the 5-inch rifle and 7-inch howitzer are respectively 45 and 105 pounds. The same projectiles that are used with the 7-inch howitzer can be used with the 7-inch mortar with probably a change in the fuze similar to that indicated for the 3.6-inch mortar. The normal projectiles for the 7-inch mortar will, however, have a weight of 125 pounds, and in addition there will be a long steel shell charged with high explosive, weighing 150 pounds.

PROJECTILES FOR SEACOAST GUNS.

As far as determined upon, the projectiles for the 8-inch rifle consist of cast-iron solid shot and forged-steel shot. The former are 28 inches long, cast of iron, having a tensile strength of 27,000 pounds per square inch, and weigh 300 pounds. Rotation is given by a copper band hammered into a groove 1.63 inches from the base. Three cannelures are cut in the copper band to facilitate the flow of the liquid.

The steel shot are forged with a cavity nearly conical in form, extending from the base to the rear of the head. They weigh 300 pounds and are 28.3 inches long. The cavity is, after finishing, closed with a base plug, which screws into the base. Both of these projectiles have a radius of 2 calibers for the curvature of the head.

Digitized by Google

Experiments are in progress with a view to adopting an armor-piercing projectile, and it is probable that a shell with some form of high explosive will also be used.

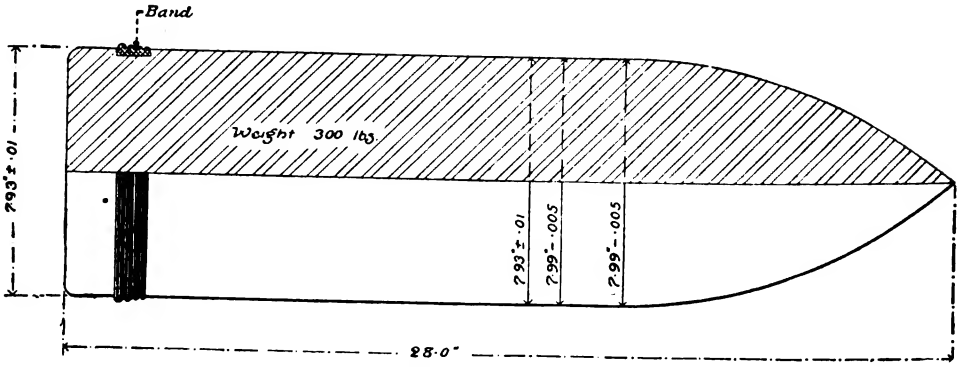

Fig. 75. Cast-iron Solid Shot for 8-inch Breech-loading Rifle.

The projectiles for the 10-inch and 12-inch rifles are of the same form as those for the 8-inch. The 10-inch shot weighs 575 pounds and the 12-inch 1,000 pounds. Both are made 3½ calibers in length.

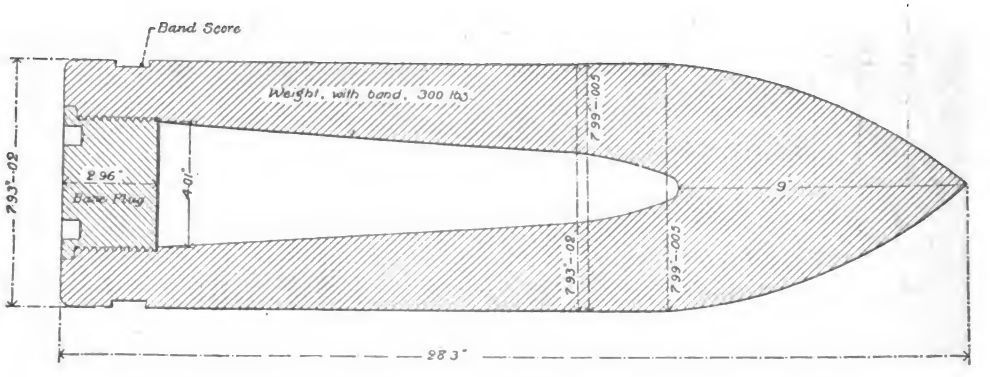

Fig. 76. Forged-steel Shot for 8-inch Breech-loading Rifle.

PROJECTILES FOR SEACOAST MORTARS.

For the 12-inch mortar there are four types of service shell—two common and two for deck piercing. The common shell are of the ordinary form, made of cast iron, and weigh respectively 800 and 1,000 pounds. The 800-pound shell is 36 inches long, and is intended to carry 17 pounds of emmensite, and the 1,000-pound shell is 44.5 inches long and will carry 27 pounds of the same high explosive.

The deck-piercing projectiles are of similar form to the common, but made of steel. The 800-pound shot is cored and the base closed with a screw base plug. It is 36 inches long. The 1,000-pound shell is 43.9 inches long and has a cavity sufficiently large to hold 38 pounds of emmensite. The bursting charges are ignited by detonating fuzes.

All of these projectiles have copper bands with 4 cannelures cut in them.

The curve of the head has a radius of 1½ calibers in the common shell and the 800-pound deck piercer, and of 2 calibers in the 1,000-pound deck piercer.

Digitized by Google

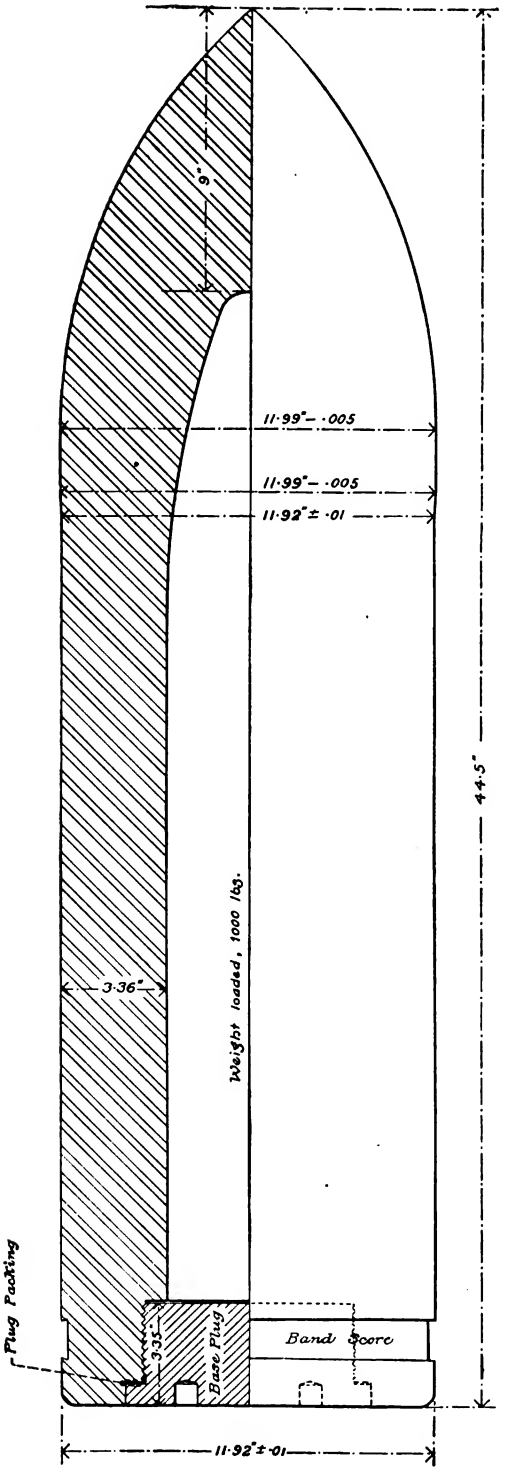

Fig. 77. Service Shell for 12-inch Breech-loading Rifled Mortar.

Digitized by Google

Digitized by Google

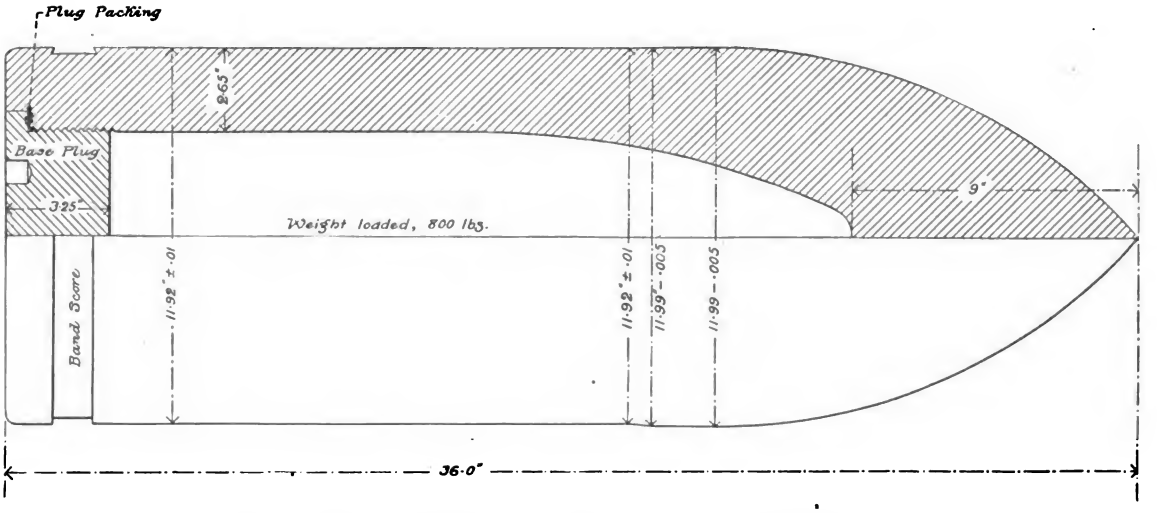

Fig. 78. Deck-piercing Shell for 12-inch Breech-loading Rifled Mortar.

COLORS FOR PROJECTILES. (*See frontispiece*, fig. 79.)

Certain distinctive colors have been adopted for projectiles so that their nature may be known at a glance.

The projectiles, except band and fuzes, will be coated with a thin, hard, and smooth paint, colored as shown on the drawing, viz:

Shrapnel, with point charge—Body, black; head, vermilion.

Shrapnel, with base charge—Body, from band forward to include three-fifths of length of head, black; body, in rear of band and two-fifths of length of head next to fuze, vermilion.

Canister—Wholly black.

Cast-iron shell—Body, inclusive of one-half of length of head, black; one-half of the length of head next to point, vermilion.

Chilled-iron shot—Body, inclusive of one-half length of head, black; one-half of the length of head next to point, slate.

Cast-iron shot—Wholly black.

Armor-piercing steel shot—Body, black; head, slate.

Steel shell—Body, black; head, white for gun cotton, yellow for emmensite, and vermilion for gun powder, bursting charge.

Digitized by Google

Digitized by Google

CHAPTER VIII.

FUZES.

Fuzes may be defined to be the means used to ignite the bursting charges of hollow projectiles. They may be classified with regard to their location in the projectile into two classes—base and point fuzes. They may also be classified with reference to their mode of operation, as percussion, time, and combination fuzes, according as they are made to explode the charge by the effect of impact, by the burning of a certain composition for a specific time, or contain both of these means of ignition.

The fuzes furnished by the Hotchkiss Company for the projectiles for their mountain guns have already been described in the chapter devoted to that subject. A new point-percussion fuze for the caliber 1.65 Hotchkiss rifle is, however, now being manufactured at Frankford Arsenal, which will be described further on.

THE FRANKFORD ARSENAL BASE-PERCUSSION FUZE "A."

MODEL 1893.

This fuze is composed of thirteen individual parts, as follows:

Body.
Closing-cap screw.
Primer-closing screw.
Primer.
Tin-foil disk.
Restraining disk.
Igniter-plunger sleeve.
Igniter-plunger spindle.
Firing pin.
Safety ring.
Catch pin.
Spiral spring.
Composition.

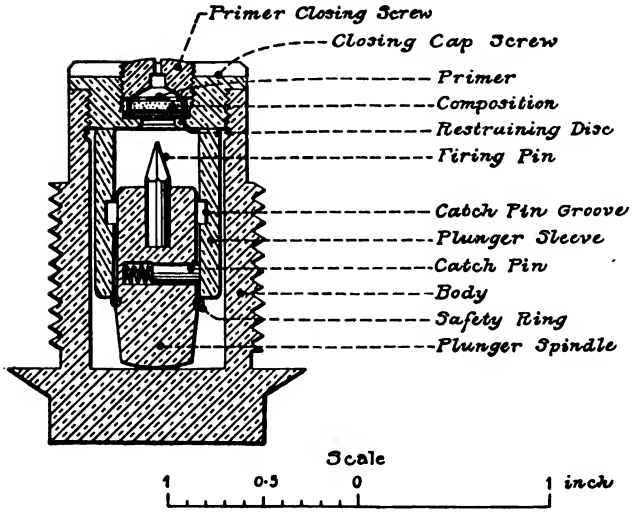

Fig. 81. Frankford Arsenal Base-percussion Fuze "A."

The fuze is made principally from hard-rolled brass rods.

The body has a beveled flange thinned down on the edges to make a gas-tight joint on the base of the shell. It has also a flat on the top for a wrench. The outside of the body is threaded and turned to the proper size, and the interior, after being bored out for the plunger, is threaded for the closing-cap screw, which holds the plunger in position.

The closing-cap screw has a receptacle for the primer, and is threaded on the interior for the primer-closing screw. The primer-closing screw holds the primer in place, and has a vent which admits the flame from the primer to the shell.

Digitized by Google

The primer, of sheet metal, has two vents, through which and the vent in the primer-closing screw, the flame from the compositon may pass to the bursting charge of the shell.

The composition in the primer consists of a mixture of 40 parts of fulminate of mercury, 20 parts of potassium chlorate, 15 parts of sulphide of antimony, and 50 parts of glass. The whole is then incorporated with such an amount of gummy substance as will give the desired consistency to the mass.

Besides being covered by the tin-foil disk, the composition is also covered by a restraining disk which serves two purposes—one for safety when there has been an accidental arming of the plunger, and the other to prevent the firing pin from pressing against the composition during flight, especially on the descending branch of the trajectory in high-angle firing.

The plunger, which is the principal feature of this fuze, is of the Dungan design, and is made up of the following parts: The sleeve, spindle, firing pin, safety ring, catch pin, and spiral spring. The spindle carries the firing pin, which is squared at its point. A recess and a groove are cut into the spindle. The recess contains a spiral spring and a catch pin, and the sleeve has an interior groove for the point of the catch pin to enter. The open-spring safety ring is sprung into the groove of the spindle.

To assemble the fuze, the plunger sleeve is slipped over the spindle until it rests on the safety ring, the catch pin being forced into its recess against the action of the spiral spring. The plunger complete is now inserted in the body and secured in place by the cap screw.

The restraining disk is first placed in the recess in the cap screw, the primer is then inserted and secured by the primer-closing screw.

The action of the fuze is as follows:

When the piece is discharged, the inertia of the plunger sleeve causes it to slide relatively to the rear against the resistance of the safety ring. This ring is pushed from its seat to the bottom of the spindle. When the plunger sleeve reaches its farthest position to the rear the catch pin, actuated by the spiral spring, engages in the annular groove in the plunger sleeve, in this way binding the sleeve to the spindle, increasing the mass and, therefore, the effectiveness of the spindle as a plunger. The point of the firing pin now projects beyond the plunger sleeve, and the fuze is said to be "armed."

On impact, the inertia of the plunger carries it forward, and the point of the firing pin pierces the restraining disk and ignites the composition. The flame from the composition passes through the two vents in the primer, through the vent in the primer-closing screw and thence to the bursting charge in the shell.

The weight of the sleeve and the resistance in pounds of the safety ring must be adjusted to the velocity at which the fuze is required to act. At the same time the fuze must be safe for transportation.

The fuze has threads of left-hand pitch, which tend to tighten the fuze in the projectile when fired, in opposition to the right-hand pitch of the service rifling.

This fuze is for use in the 5-inch siege gun, the 7-inch siege howitzer, the 7-inch mortar, and the 12-inch seacoast mortar. In all probability the resistance to be given to the safety ring will be the highest resistance against which it will arm in the 7-inch siege mortar. The resistance now given is 28 pounds, but the advisability of increasing this to 45 pounds is under consideration.

MODEL 1893, MODIFIED.

This fuze is the same as the "A" fuze already described, except that the closing-cap screw has been changed.

This cap screw has been lengthened so as to contain a 2.4-grain primer like that used with the "C" fuze. The primer-closing screw has a flat head and a cavity large enough to hold

Digitized by Google

8 grains of powder as a priming. This priming is held in place by a closing disk riveted in by turning over an edge of the closing screw

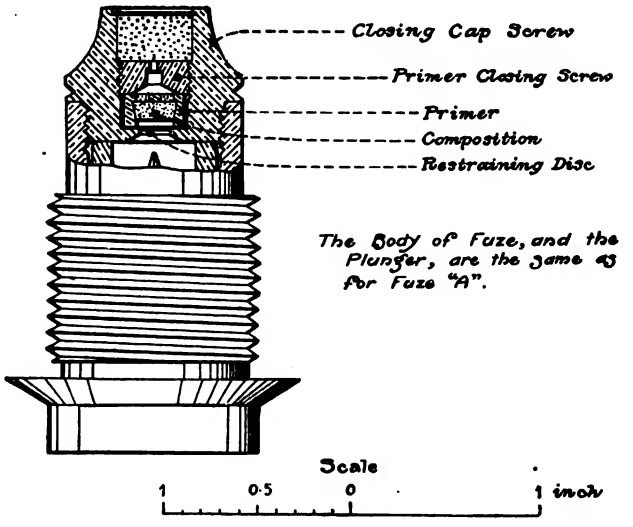

Fig. 82. Frankford Arsenal Base-percussion Fuze "A," modified.

The closing-cap screw has a notch cut on one side of its circumference for a wrench. It is locked in place by driving a portion of the sharp lip into a notch in the end of the body of the fuze.

FRANKFORD ARSENAL BASE-PERCUSSION FUZE "B", MODEL 1894.

This fuze is for field projectiles, and differs from the "A" fuze in being for high velocity, and requiring a pressure of 120 pounds minimum and 135 pounds maximum on the safety ring to "arm" the fuze.

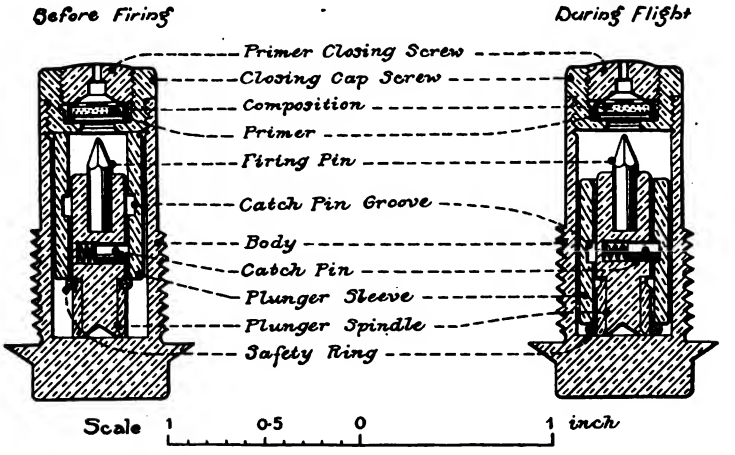

Fig. 83. Frankford Arsenal Base-percussion Fuze "B."

The fuze is smaller than the "A" fuze, and in order to give the safety ring a resistance of 120 to 135 pounds it was necessary to make it of much larger wire, which required the

Digitized by Google

igniter-plunger spindle to be made in two parts, it having been found that while the smaller wire could be forced over a tapered spindle to its groove without losing its elasticity, the larger wire ring was rendered useless by this operation. The spindle is therefore made with a main part and a washer; the safety ring is slipped into a groove in the washer and the washer is then put on the main part and riveted.

The safety of this fuze in transportation is insured, as both it and the "A" fuze, from their peculiar construction, can not possibly be armed progressively, but must be armed almost instantaneously or not at all. The action of the fuze is the same as that of the "A" fuze, already described.

FRANKFORD ARSENAL BASE-PERCUSSION FUZE "C," MODEL 1894.

This fuze is also for high velocity, and is designed to replace the "B" fuze, which was only issued as a temporary expedient. It is used with field projectiles.

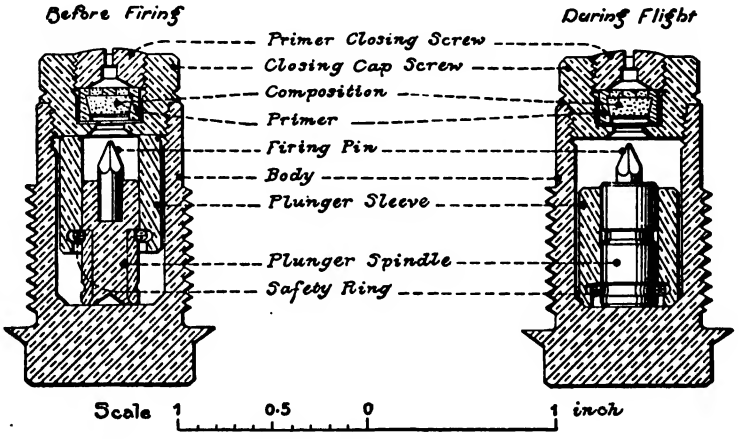

Fig. 84. Frankford Arsenal Base-percussion Fuze "C."

The fuze consists of the following parts: The body, closing-cap screw, primer-closing screw, primer, tin-foil disk, restraining disk, igniter-plunger sleeve, igniter-plunger spindle (composed of two parts), firing pin, safety ring, and the composition.

In this fuze the plunger, primer, and stock are materially different from the like parts in the "A" and "B" fuzes. The closing-cap screw, like the similar part in the foregoing fuzes, has a slot for a screw-driver, so that it may be set down independently of the primer-closing screw, and is also provided with a thin lip, formed by turning a groove in the cap-square.

The tin-foil disk, restraining disk, firing pin, and composition are the same as described for the "A" fuze.

The body, on its exterior, has left-hand threads, 14 to the inch. The beveled flange is thicker and the bevel more abrupt than in the "A" and "B" fuzes. The interior of the body is bored out a true cylinder to within .06 inch of the bottom, where it joins the bottom by a conical slope.

The primer is turned from hard-rolled brass rods of the same diameter, and is counter-bored and provided with two ventholes. The primer contains 2.4 grains of composition, which is prevented from being dislodged when the projectile is discharged by the counter-boring.

Digitized by Google

The plunger is of the Dungan design, with General Flagler's modification, and consists of the sleeve, firing pin, spindle, and safety ring. The spindle has cut in it two grooves, the upper of which holds the safety ring. In order to place the ring in this groove without destroying its elasticity by forcing it over the spindle, the spindle is made in two parts—the main part and the washer. The spindle washer has the lower groove turned in it and is turned down at the upper end, so that when united with the main part the upper groove is formed. The ring is slipped on the reduced end of the washer, and the whole is then put on the spindle proper and riveted there.

The sleeve is a cylinder of brass, bored somewhat larger than the exterior of the spindle, counterbored at the base, and made with an annular recess.

The plunger is assembled by slipping the sleeve over the spindle, the safety ring resting on the shoulder of the recess in the counterboring. The plunger entire is now inserted in the stock and secured by the cap screw, the firing pin directed toward the cap screw. The restraining disk is placed in the cap-screw recess, the primer next, and the whole closed by the primer-closing screw. The cap screw is then locked by forcing into the notch in the body the portion of the lip above it. The primer-closing screw is locked by forcing an edge into a notch in the cap screw.

When assembled, the cap screw rests against the plunger and prevents any movement of the parts which might tend toward arming the fuze prematurely.

The action of the fuze, when the piece is discharged, is as follows :

The inertia of the plunger sleeve causes it to slide relatively to the rear against the resistance of the safety ring, which is pushed from the upper groove. The ring takes its new position in the lower groove, which, being shallower than the upper groove, causes the ring to fit half in the groove and half in the annular recess in the sleeve, thus binding the sleeve and spindle together. This is more thoroughly effected as the sleeve, in its movement to the rear, strikes the funnel-shaped contraction in the chamber, and is closed in on the spindle. By this contraction the formation of a mushroom head on the base of the plunger is prevented ; such a formation might be sufficient to prevent the forward movement of the plunger on impact.

The point of the firing pin now projects beyond the sleeve and the fuze is armed.

On impact the inertia of the plunger carries it forward, and the point of the firing pin, piercing the restraining disk, ignites the composition. The flame from the composition passes through the two vents in the primer, through the vent in the primer-closing screw, and thence to the bursting charge in the shell.

This fuze has a resistance of from 142 to 160 pounds and is required to act with a velocity of about 1,685 feet per second. In order to secure safety in transportation the maximum resistance is given to the safety ring, which, by experiment, is found to allow the proper action of the fuze in the gun.

FRANKFORD ARSENAL POINT-PERCUSSION FUZE FOR HOTCHKISS MOUNTAIN RIFLE, CAL. 1.65

This fuze is very similar in its construction and action to the Frankford Arsenal base-percussion fuze "C," but, as its name indicates, screws into the point instead of the base of the projectile.

It consists of the following parts: The body, closing-cap screw, primer-closing screw, primer, tin-foil disk, restraining disk, igniter-plunger sleeve, igniter-plunger spindle, firing pin, safety ring, bottom-closing disk, and the composition. It is made principally from hard-rolled brass rods.

The body of the fuze has two wrench slots cut in the conical slope or mantle, and is threaded and turned on the outside to the proper size, and on the interior is bored for the

Digitized by Google

plunger and threaded for the closing-cap screw, which holds the plunger in position. The exterior is partly threaded with a right-hand screw, sixteen threads to the inch. The bottom of the body has five holes in it for the passage of the flame, and has a narrow annular recess for the purpose of holding a copper disk in place. This disk, which is but .002 of an inch thick, prevents the powder from entering the chamber of the fuze and interfering with the proper working of the plunger. When the composition is exploded this disk is blown off and the flame reaches the bursting charge.

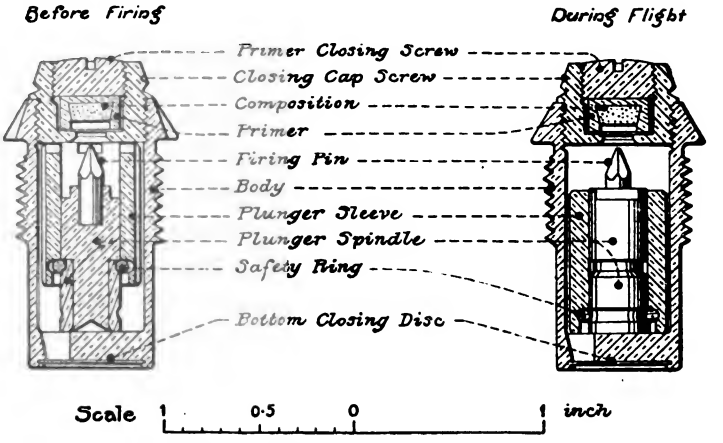

Fig. 80. Frankford Arsenal Point-percussion Fuze for Hotchkiss 2-pounder Mountain Gun.

The closing-cap screw has a receptacle for the primer and is threaded on the interior for the primer-closing screw. It has a slot for a screw-driver so that it may be set down independently of the primer-closing screw, and is also provided with a thin lip. The primer-closing screw holds the primer in position. The primer is counterbored to prevent the dislodgment of the 2.4 grains of the composition which it contains when the projectile starts forward. The same composition for the primer is used as in the base-percussion "A" fuze.

The plunger is the same as that of the "C" fuze, and it operates in the same way.

As in the other fuzes, the weight of the sleeve and the resistance in pounds of the safety ring must be adjusted to the velocity at which the fuze is required to act. This fuze can not possibly be armed progressively, but must be armed almost instantaneously or not at all. It is required to act with a velocity of about 1,300 feet per second, and the resistance of the ring is from 120 pounds minimum to 130 pounds maximum.

THE FRANKFORD ARSENAL POINT-COMBINATION FUZE, 15 SECONDS.

This fuze consists of two main parts, viz, the time element and the percussion element. The time element, which is contained in the front of the fuze, consists of the time plunger, firing pin, priming composition, compressed powder ring, brass ring, time-train cone, clamping nut, cone cover, and the cap.

The time plunger is of bronze and has five lugs on the periphery of its upper base, which serve to hold the plunger in place above the firing pin after the safety pin has been withdrawn until they are broken off by the shock of discharge. The upper extremity of the plunger is pierced to receive the safety pin, which is made of copper and whose office is to prevent the premature movement of the plunger in transportation and in handling. It also serves to raise the plunger so that the five lugs above referred to are well clear of the

Digitized by Google

body. This is to prevent any force being brought to bear on the lugs through the bending of the safety pin before the fuze is prepared for action.

The cap is of brass and further protects the safety pin and the lugs by forming a bridge over them.

The priming composition, consisting of 40 parts of antimony sulphide, 36 parts of chlorate of potash, 8 parts of meal powder, 8 parts sulphur, and 20 parts of ground glass, is contained in the base of the plunger, and is covered by a tin-foil disk.

The firing pin is of steel, and is driven into the body of the fuze at the bottom of the chamber containing the plunger. The point of the firing pin is sharp and rough.

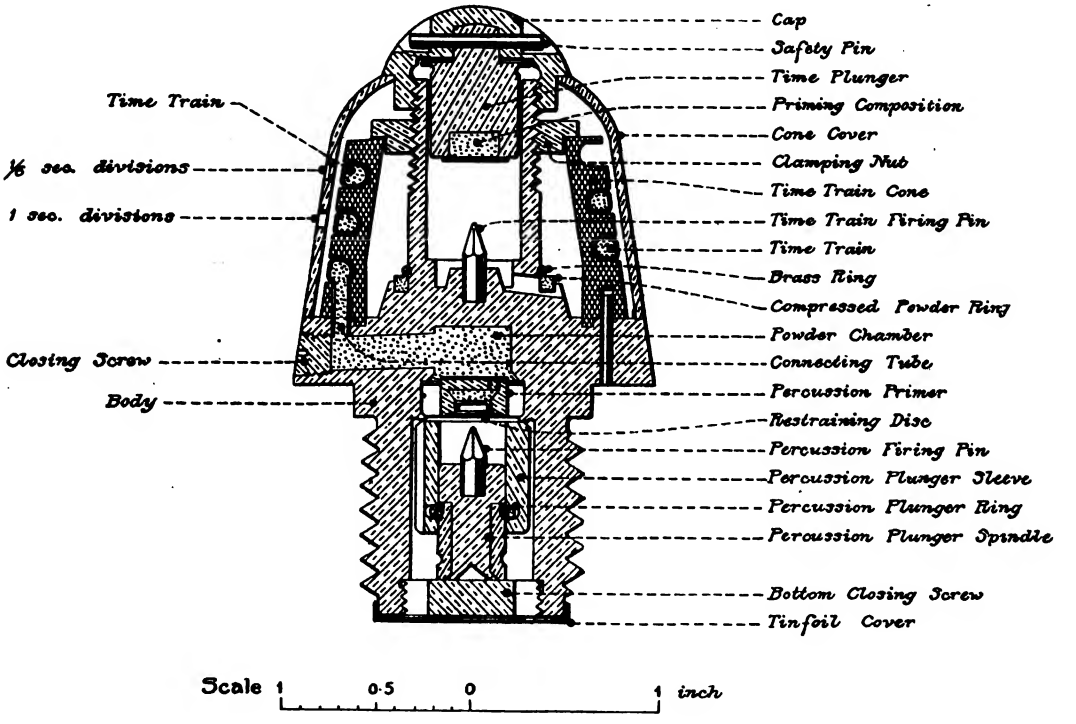

Fig. 85. Frankford Arsenal Point-combination Fuze, 15 seconds.

The compressed-powder ring is made of fine grain powder pressed into shape in a die. It is held in place in a groove cut in the body by a brass ring. Four holes in the body of the fuze allow the flame from the composition to ignite the powder ring. The cone is made of an alloy of 50 parts lead, 25 parts tin, and 6 parts antimony. It is held in place by a brass clamping nut and two brass pins, which also serve to prevent independent rotation of the cone. A lip on the base of the cone, fitting into a corresponding groove in the fuze body, acts as a gas check to prevent premature ignition of the powder in the fuze chamber.

The cone cover is of brass and pierced with holes numbered from 1 to 15. These holes lie immediately over the time train and correspond to seconds of graduation. The space between consecutive holes is subdivided into six parts and countersunk at the point of division, so that the fuze may be cut to a sixth of a second by means of a fuze cutter made for the purpose. A brass pin projects from the body of the fuze, and fitting into a slot in the cone cover, fixes the latter in position. Together with the brass cap it also serves to hold the cone in place on the fuze body.

Digitized by Google

The body of the fuze is bored out to form the powder chamber, which communicates with the time train through the connecting tube, and with the bursting charge through the grooved surfaces of the primer, plunger sleeve, and bottom closing screw.

The opening into the powder chamber through which the charge is put in is closed by a screw. A conical hole in the fuze body, just opposite this screw, allows the insertion of a steel pin for the purpose of screwing the fuze into the shell.

The percussion element consists of the primer and the plunger with its various parts.

The primer is of brass, and has three vents through which the flame may pass from the composition to the powder in the fuze chamber. The primer composition is composed of 50 parts of ground glass, 40 parts of fulminate of mercury, 20 parts of chlorate of potash, and 30 parts of antimony sulphide. On the side of the firing pin the composition is covered first with a tin-foil cup and then with a copper restraining disk. The composition is set back .04 of an inch from the restraining disk. The latter serves two purposes, one for safety when there has been an accidental arming of the plunger, and the other to prevent the firing pin from pressing against the composition during flight. On the side of the powder chamber the primer is covered with a tin-foil ring to prevent the powder in the fuze chamber from entering the grooves in the primer and plunger. The primer is also covered on this side with a paper disk.

The bottom of the fuze is covered first by a paper and then by a tin-foil disk.

The primer, plunger sleeve, and bottom-closing screw have their sides grooved longitudinally, to allow the flame from the powder in the powder chamber to reach the bursting charge of the shell. With the exception of this difference in the plunger sleeve, the plunger is the same as that in the base-percussion "C" fuze, before described.

The action of the fuze is as follows:

If it be desired to have the fuze act as a time fuze, pierce the time-train cone at right angles to the axis of the latter through the proper division in the cover. These holes being numbered from 1 to 15 and the intervals between the holes being subdivided into six parts, the fuze may be cut to a sixth of a second (from 0 seconds to 15 seconds). When the piece is discharged, the inertia of the time plunger forces it relatively to the rear, breaking or bending the five lugs, striking the firing pin, and thus igniting the composition. The flame from the composition passes through four holes in the body of the fuze, igniting the compressed-powder ring, the flame of which ignites the time train through the hole previously made in its cone. After the required number of seconds the flame reaches the bursting charge of the shell through the powder chamber and the grooves in the primer, the plunger sleeve, and the bottom-closing screw.

The action of the percussion fuze is as follows:

When the piece is discharged, the inertia of the plunger sleeve causes it to slide relatively to the rear against the resistance of the safety ring, which is pushed from its groove over the spindle. When the plunger sleeve reaches its farthest position to the rear, the ring, its diameter being increased in passage over the spindle, slips into a second groove. Owing to its increased diameter and the shallowness of the groove the ring now fits half in the groove in the spindle and half in the groove on the interior of the plunger sleeve, in this way binding the sleeve to the spindle and increasing the mass and therefore the effectiveness of the spindle as a plunger. The fuze is then armed.

On impact the inertia of the plunger carries it forward; the point of the firing pin pierces the restraining disk and ignites the composition. The flame from the composition passes through three vents into the powder chamber and ignites the powder contained therein, the flame from which passes down the grooves in the primer, plunger sleeve, and bottom-closing screw, and ignites the bursting charge of the shell.

Digitized by Google

The weight of the sleeve, and the resistance in pounds of the safety ring must be adjusted to the velocity at which the fuze is required to act. This fuze is required to act with a velocity of about 1,685 foot-seconds. In order to secure safety in transportation, the maximum resistance, which is found, by experiment, to allow the proper action of the fuze in the gun, is given to the safety ring.

For this fuze the resistance of the ring, determined as above, is 135 pounds maximum and 120 pounds minimum.

FRANKFORD ARSENAL COMBINATION FUZE, 28 SECONDS, MODEL 1892.

This fuze, designed for high-angle and low-velocity firing, is practically the same in construction as the 15-second fuze, with the exception that it has a longer time train and uses a different plunger—the Dungan without the Flagler modification—the same as that which is used in the "A" fuze. This fuze is constructed for an initial velocity of from 250 to 300 feet per second. The sleeve weighs 144 grains, the spindle 136 grains, and the resistance the safety ring, as thus far made, offers to arming is 14 pounds minimum and 17 pounds maximum.

This fuze is for the 3.6-inch field mortar, though it is possible that its use will be extended to other pieces. The resistance to be given to the safety ring has not, as yet, been finally determined. It is probable that both this and the "A" fuze will, in future constructions, have the same plunger as the "C" fuze, with the resistance of the safety ring adapted to low velocities. It is also probable that the cap will be made the same as in the 15-second fuze. This cap raises the lugs of the plunger farther from the body and prevents their being shorn off accidentally. It also covers the projection of the plunger through which the safety pin passes and thus protects the plunger from blows from the outside.

Digitized by Google

Digitized by Google

CHAPTER IX.

SIGHTS.

SIGHTS FOR HOTCHKISS MOUNTAIN GUN, CALIBER 1.65.

The front sight is a plain roughened steel point, and is permanently fixed to the right rimbase. The rear sight is merely a scale of tangents, and consists of a vertical bar graduated in yards or degrees, which slides through a socket and is fixed in position by means of a clamp screw. It carries a sliding leaf conveniently graduated for correcting for drift or wind. The tangent sight is only mounted on the gun when in action, being removed at other times to prevent it from being injured.

SIGHTS FOR THE HOTCHKISS MOUNTAIN GUN, CALIBER 3-INCHES.

The front sight is of the open type, allowing a large field of view. It is made of cast

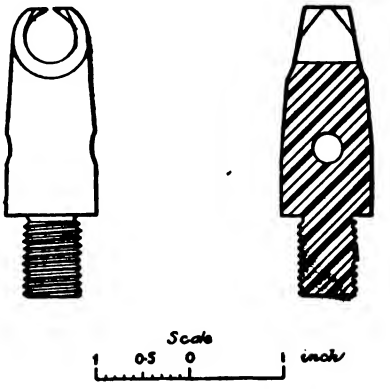

Fig. 86. Front Sight for Hotchkiss 12-pounder Mountain Gun.

steel with two branches, formed on the arc of a circle, the points of the branches coming nearly together at the top of the sight. For rapid sighting the whole circle can be used, but for close work the space between the two points becomes the front sight.

The rear sight consists of a vertical bar of triangular cross section, graduated in millimeters on one face and in ranges on the other. The socket for the sight is a vertical hole through the breech of the gun on the left side. The sight is supported at any desired point in the socket by means of a sliding stop, which is clamped to it and prevents it from dropping too far. This stop may be set at any range before the sight is placed in its socket. At

Digitized by Google

the head of the bar is a deflection slide for making corrections for drift, wind, etc. On the deflection slide there is an open sight for rough and a peep sight for fine sighting.

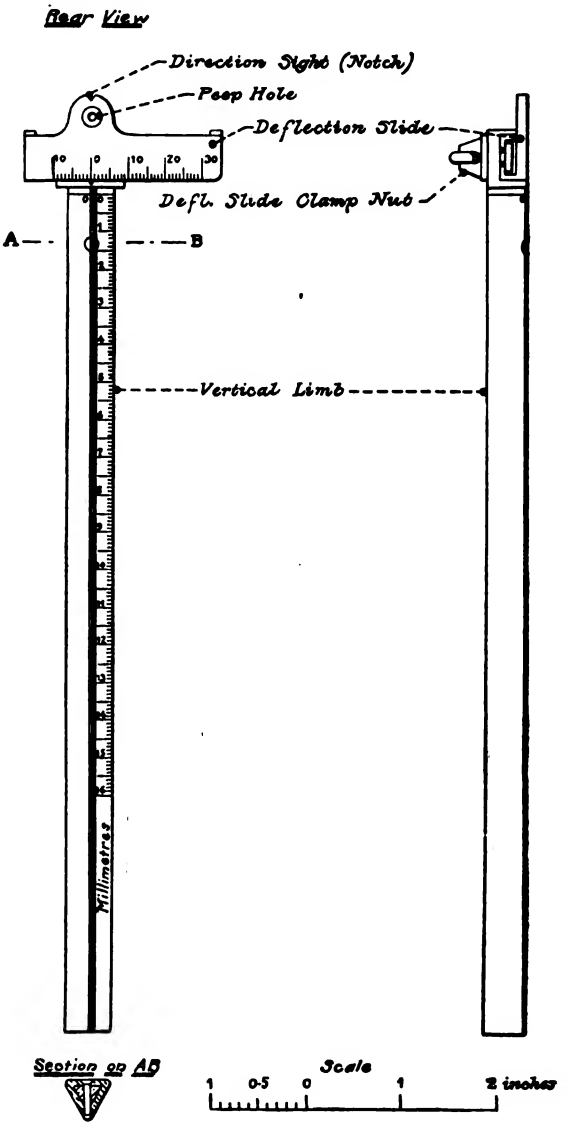

Fig. 87. Rear Sight for Hotchkiss 12-pounder Mountain Gun.

SIGHTS FOR FIELD AND SIEGE GUNS.

All of the sights for these guns have not, as yet, been entirely determined upon. For accurate long-range firing some form of telescopic sight will undoubtedly be required, and several such sights have been tried with satisfactory results, but thus far no type has been definitely adopted.

Digitized by Google

SIGHTS FOR THE 3.2-INCH RIFLE.

FRONT SIGHT.

The front sight consists of a bronze standard fastened by four screws to a seat on the right rimbase of the gun, in the upper part of which is a circular aperture containing a cross.

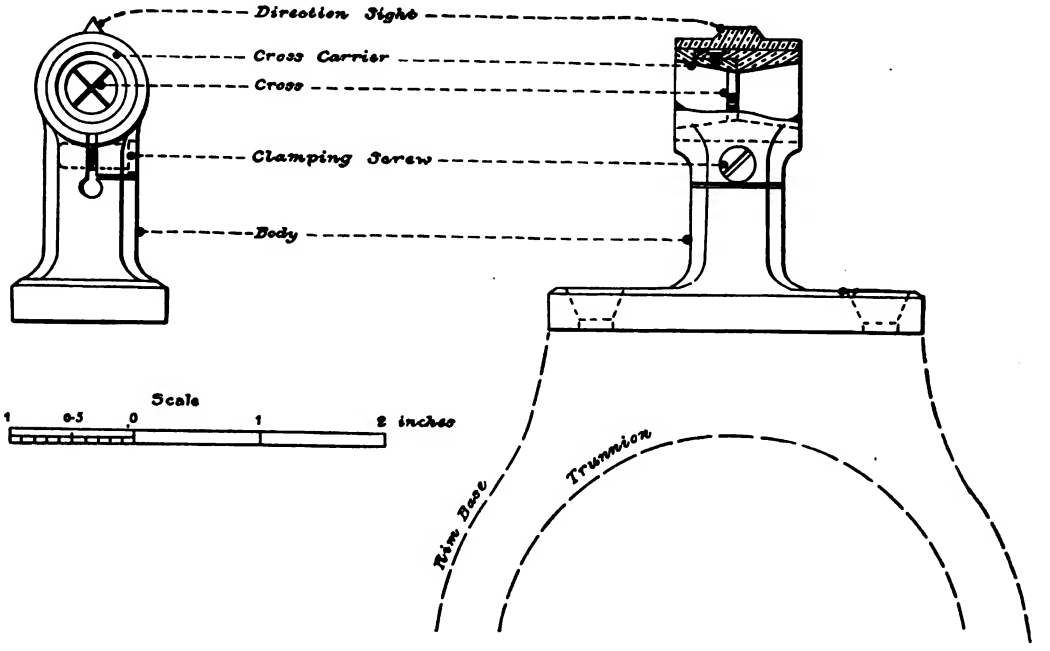

Fig 88. Front Sight for 3.2-inch Breech-loading Rifle.

The parts of the sight are the body, cross carrier, cross, and the direction sight. The carrier is formed of two cylinders, the rear one of which carries a cross made of two pieces of steel ribbon halved on each other and having their planes parallel to the axis of the gun. This cylinder fits into the forward one, and a countersunk screw unites them. The cross is set with its arms making an angle of 45° with the horizon. The cross carrier can be removed from the body for the adjustment of the cross ribbons and two cuts, one vertical and the other horizontal, with a clamp screw, form the means of fastening it in place. At the top of the device is the direction sight, which is a pyramidal projection, for the purpose of quickly training the piece in nearly the direction required.

REAR SIGHT.

The rear sight is made of bronze and brass, and is composed of the following principal parts:

Graduated vertical limb.
Base.
Trunnion.
Deflection scale.
Level.
Deflection screw.
Elevating screw.
Sighting leaf.
Vernier.
Adjusting screw of spirit level.
Trunnion clamping screw.
Trunnion check screw.
Seating pin.

Digitized by Google

The base of the sight is provided with a taper shank, which fits into a corresponding socket on the rear of the gun. A small steel seating pin drops into a recess in the socket and insures the correct seating of the sight.

The trunnion is pivoted in the base in such a way as to admit of partial rotation in a plane perpendicular to the axis of the gun. This motion is limited in either direction by a check pin, and the trunnion can be fastened at any position by a clamp screw.

The deflection scale forms the lower part of the vertical limb and is at right angles to it. The limb has a horizontal motion guided by slots in the trunnion, and actuated by the deflection screw. This permits the sight to be set for drift, windage, etc.

The graduation of the deflection scale is the same as that of the first two degrees of the vertical scale. In future constructions, however, the deflection scale will be graduated in thousandths of range; that is, one point on the scale causes a deflection of one-thousandth of the range; for instance, at 1,000 yards a point would correspond to a deflection of 1 yard, at 5,000 yards 5 yards, etc.

A spirit level is attached to the deflection scale and is provided with holding and adjusting screws. The trunnion check screw allows a motion of about 25 degrees in the vertical limb in either direction, and the level enables the gunner to level his gun or make the limb of his sight vertical.

The elevating screw extends from end to end of the vertical limb and causes the sighting leaf to move along the limb. The vertical limb is graduated to degrees by horizontal lines, and each degree is divided into sixths by diagonal lines. The sighting leaf carries a vernier which, in conjunction with the diagonal lines, permits of reading to minutes. A peephole in the sighting leaf .05 of an inch in diameter, is used with the cross of the front sight for accurate sighting. A quick sight can be taken by using the top of the leaf and the direction point of the front sight.

In the latest model of the sight there are three sets of graduations. On the right side of the rear face of the vertical limb the scale is divided as above described into degrees and minutes. On the left side the sight is graduated for shrapnel and on the reverse side for shell in yards of range. For shrapnel the scale is divided by horizontal lines for intervals of 250 yards up to 4,500, but by using the vernier and diagonal lines a reading can be obtained to 50 yards. For shell the scale is graduated by horizontal lines for every hundred yards up to 4,500.

The rear sight should be removed from the gun before firing.

SIGHTS FOR 3.6-INCH AND 5-INCH B. L. RIFLES.

These sights differ from those for the 3.2-inch rifle only in the length of the vertical limb and in the graduation of the tangent and deflection scales.

The rear sights for field guns are graduated up to 15 degrees, and that for the siege gun to 12 degrees.

SIGHTS FOR THE 3.6-INCH B. L. R. MORTAR.

These are mere direction sights, the elevation being given by the gunner's quadrant.

The front sight consists of a simple steel point, fixed at the muzzle in a plane passing through the axis of the piece, perpendicular to the axis of the trunnions.

The central line of the rear sight lies in the same plane, and its base is secured to the rear of the mortar by two screws. The sight somewhat resembles the buckhorn sight for small arms, and consists of a notch in the top, which is not allowed to come to a vertex, but terminates in a circular aperture.

Digitized by Google

Fig. 89
Rear Sight for 3·2 inch B.L. Field Rifle

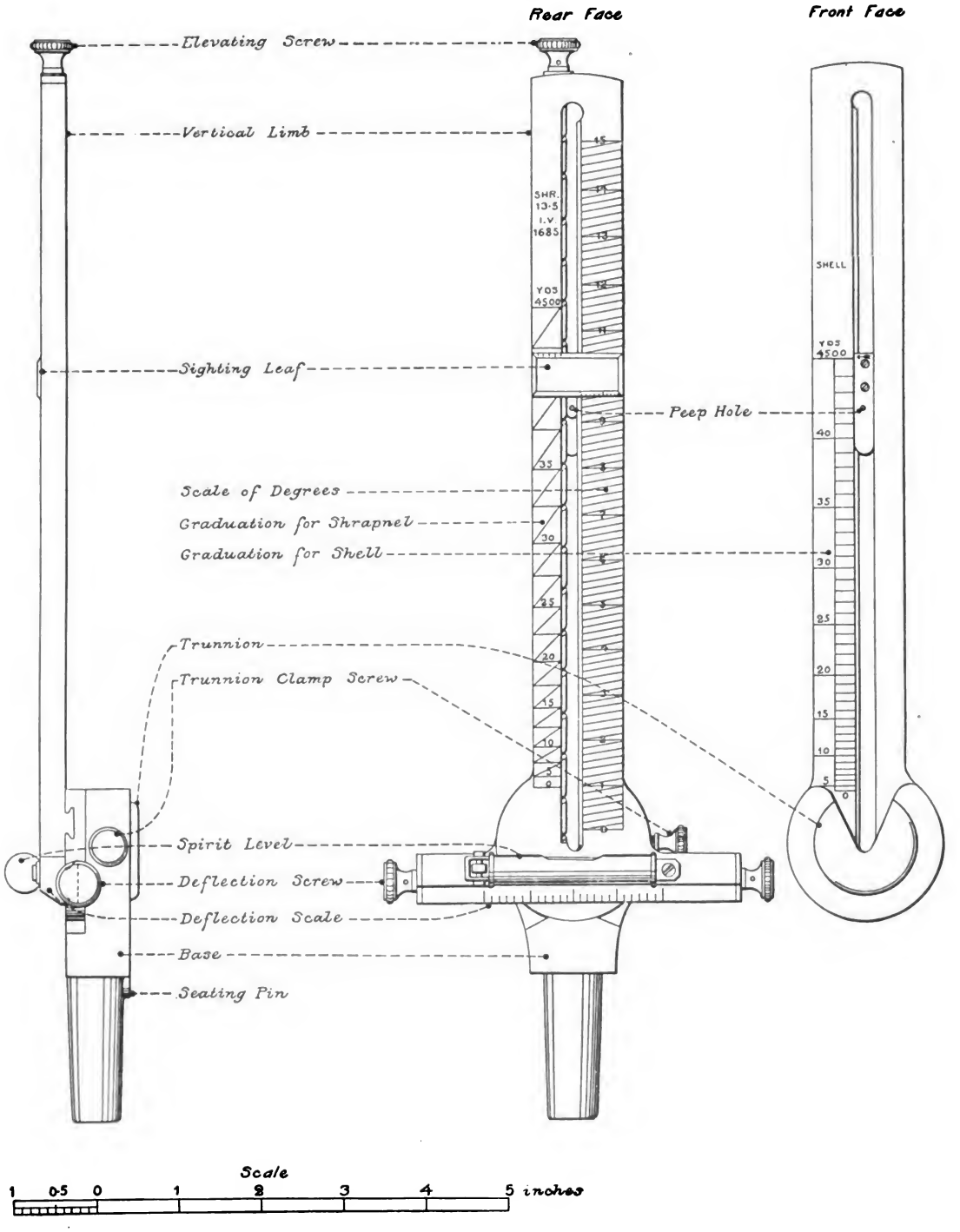

Digitized by Google

Digitized by Google

THE GUNNER'S QUADRANT.

This instrument is used on all kinds of guns and mortars, either to give the elevation directly or to verify the angles obtained by ordinary sights. It is applied to the breech of the gun, the face of the muzzle, to an element of the bore, or to an element of the exterior surface when it is parallel to the axis of the bore, as may be most convenient. In the 3.6-inch and 7-inch mortars two seats for the feet of the quadrant are squared off on the upper side of the piece in rear of the trunnions.

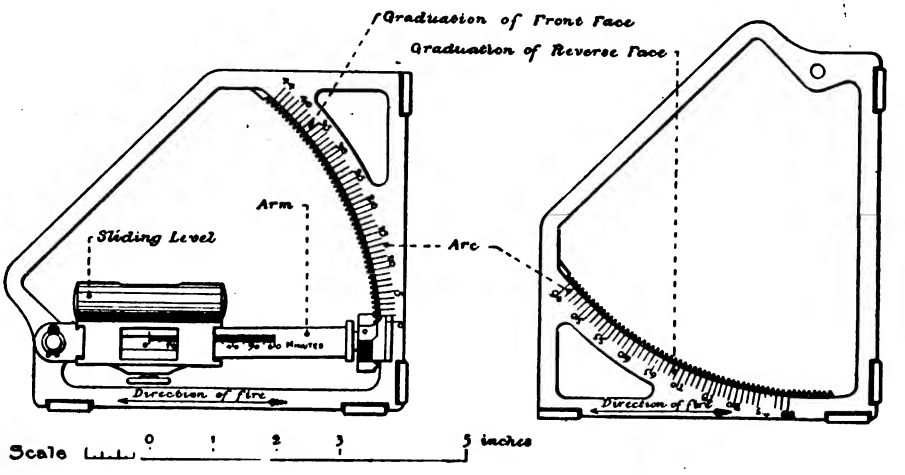

Fig. 90. Gunner's Quadrant.

The quadrant is composed of two main parts, the body carrying the graduated arc, and the movable arm carrying the index and the level. The movable arm also carries a graduation in minutes from 0 to 60 degrees, and the level, which is capable of a longitudinal movement along the arm, carries a second index for reading this scale.

Degrees are read upon the graduated arm of the body, minutes by the sliding level and scale on the movable arm.

The graduated arc is provided on the inside with a toothed circular rack, each tooth of which corresponds to a degree mark. The movable arm is hollow and holds a spindle which carries on its end a small toothed sector. A spiral spring contained inside the hollow arm constantly urges the spindle and sector outward, thereby engaging the teeth of the sector with those of the graduated arc and holding the arm in any position it may be placed. To move the arm it is necessary to press back the sector against the action of the spiral spring until its teeth clear those of the graduated arc; the arm may now be moved to a new position, and when the pressure is removed from the sector its teeth will again engage with those of the graduated arc.

The principle by which the scale of the movable arm is constructed to read to minutes is as follows:

The movable arm represents a portion of the arc of a circle, in this case having a radius of 113.45 inches.

The level is a chord of this circle, and its index is at its middle point.

Digitized by Google

In the figure, AA' represents the movable arm, the radius of which is 113.45 inches; aa' is the graduation on the arm, the length of which is 1.98 inches. Let BD represent the position of the level when the index is at o'' and $B'D'$ its position when the index is at 60. Draw radii Ca and Ca', which must intersect BD and $B'D'$ at their middle points, since the index is at the center point of the level. It is to be shown that the position $B'D'$ of the level when its index is at 60 makes an angle equal to one degree with the position BD of the level when its index is at the point marked o''.

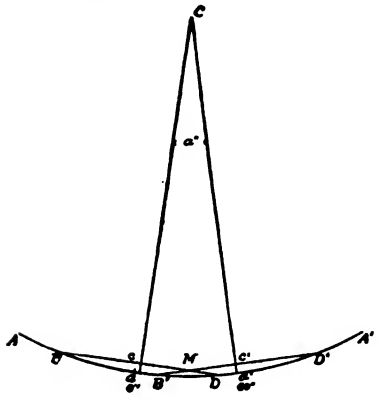

Fig. 91. Demonstration of Principle of Gunner's Quadrant.

The angle aCa' is equal to the angle BMB', because the sides aC and $a'C$ are respectively perpendicular to the sides BM and $D'M$.

The angle between the two positions of the lever is therefore equal to that subtended by the graduated portion of the movable arm. This angle is equal to $\frac{\text{arc}}{\text{radius}}$ or $\frac{1.98}{113.45}$. Multiplying by $\frac{360}{2\pi}$ the number of degrees in a unit of circular measure, there results unity; or the angle is 1°. Dividing this into sixty equal parts each division will represent one minute. For the construction of this quadrant any length of graduation can be assumed for an angle of 1° and the corresponding radius calculated, or assuming any radius, the corresponding length of graduation can be calculated.

TO USE THE QUADRANT.

To give any elevation less than 45 degrees, as 13 degrees 17 minutes: Place the index on the movable arm opposite the 13-degree mark on the graduated arc of the body, slide the level along the arm until its index is opposite the seventeenth division of the scale on the movable arm. The quadrant is now set to the required reading. Place the quadrant in the bore or against the face of the piece, always being careful to keep the side of the graduated arc in use to the left, looking in the direction of the target, and to keep the arrow showing the line of fire pointing in the direction of the target. Elevate the piece until the bubble of the level comes to rest at the center. This will be the elevation required. By revolving the quadrant in this position 180 degrees about a vertical axis, placing the quadrant in the bore, if not already there, and then bringing the bubble again to the center of the level the piece will be given a depression of 13 degrees 17 minutes; providing, of course, its mount be such as to allow 13 degrees 17 minutes depression.

To give any elevation greater than 45 degrees, as 63 degrees 33 minutes: Place the index on the movable arm opposite the 63-degree mark on the graduated arc of the body (this mark will be found on the opposite side of the quadrant from the 13-degree mark), slide the level along the movable arm until its index is opposite the thirty-third division of the scale on the arm; the quadrant is now set to read 63 degrees 33 minutes.

Place the quadrant in the bore or against the face of the piece, being careful, as before, to keep the side of the graduated arc in use to the left of the piece, looking in the direction of the target, and to keep the arrows showing the line of fire pointing in the direction of the target. Elevate the piece until the bubble comes to rest at the center of the level. This will be the elevation required.

It is thus seen that any elevation or depression in degrees and minutes from 0 to 90 degrees, within the limits imposed by the method of mounting, can be given by this quadrant. It will be noticed that this quadrant is graduated on one side from 0 to 44 degrees, and on the other from 45 to 89 degrees. The extra degree on both sides would be given by the

Digitized by Google

sliding level. It will also be noticed that if 45 degrees be given on the one side by moving the arm to 44 degrees and the index on the level to 60 minutes, and the quadrant be then placed to give readings above 45 degrees, without changing the arm or level, it will still record 45 degrees, for the position of the level to give a reading of 60 minutes below 45 degrees is also the position to give a reading of 0 minutes above 45 degrees, and the main index will be found to stand at 45 degrees on the opposite side of the graduated arc.

THE POINTING ARC.

This instrument has not, at this date (February, 1895), been adopted for service, but is under consideration. If adopted, it will replace the gunner's quadrant for all guns firing with not more than 20 degrees elevation, and it has even been suggested that it be used to wholly replace the tangent sight for field guns. It is more compact than the quadrant, and it has provision for scales of yards as well as degrees.

The principle of the pointing arc is the same as that of the movable arm of the quadrant.

The pointing arc is made principally of bronze, and comprises the arc, the slide, and the level piece. The arc has two small seating plates secured to its base by screws—the heads of the screws being countersunk in order not to interfere with the correct seating of the instrument upon flats made on the gun near its breech. The slide is connected to the arc by a dovetail joint and moves over it, the friction of a spring being sufficient to keep the slide in whatever position it is placed, and at the same time permitting the slide to be set easily by the hand wherever desired. Two small screws on the side of the slide permit of an adjustment of the tension of the spring. A steel pin projecting from the under surface of the slide moves in a groove in the upper surface of the arc, and by abutting against steel stop pins at each end of the groove prevents the slide from being moved off the arc.

The upper curved surface of the arc is graduated from 0 to 20 degrees, and by means of a vernier at the rear of the slide readings to 2 minutes may be had.

Both sides of the arc are furnished with plates graduated in yards, one being for shell and the other for shrapnel. These plates are removable and are graduated for the piece with which the arc is to be used.

The zero index marks on the sides of the slide are supplemented by two others equidistant, plus 2 and minus 2 degrees. Any one of the three may be used in setting the slide to a desired range in yards. The top of the slide has a scale graduated 3 degrees on either side of the zero with subdivisions of 6 minutes; the markings, plus and minus, are the reverse of those on the side of the slide. The vernier on the level piece has three divisions covering two of those on the scale of the slide, making the least reading 2 minutes. Motion is given the level piece by a deflection screw with milled head.

USE OF THE INSTRUMENT.

The arc is especially valuable when a greater or less elevation is required than can be obtained by the service sight, or when the object is seen imperfectly or not at all. Other advantages are apparent from the following description of its manipulation:

To set the pointing arc the zero of the level piece is brought to coincide with the zero of the slide scale and the required elevation in yards is taken on the side desired. Should the object be on a different level from that of the piece, and this difference be known in degrees and minutes, the index of the level is moved to indicate the given angle—to the plus side if an elevation, and to the minus side if a depression—after which the degree or yard scales may be used as if the object were on the same level. The correction is made in this manner if 3 degrees or less, but for angles up to 5 degrees the 2-degree marks on the side of

Digitized by Google

the slide must be used, the index mark of the level being moved to coincide with the mark corresponding to the number of degrees, elevation or depression, less 2 degrees. The plus 2-degree mark is used as the index when the object has an elevation, and the minus 2-degree mark when a depression.

In case the angle of elevation or depression, due to a difference of level between the gun and the object, is unknown it may be obtained as follows: Sight the piece on the object by the ordinary sight, using any convenient elevation; set the pointing arc at this elevation or range and move the level piece by the deflection screw until the air bubble is centered. The index of the level piece then points to the desired angle—plus, if an elevation, and minus, if a depression. If the angle be greater than 3 degrees, the plus 2 or minus 2 degree mark must be utilized. Practically it will be found that these secondary index marks will be very seldom used.

For giving direction to the gun when the pointing arc is used, a rear sight having a sidewise adjustment only, will probably be substituted for the one now in service. The front sight will be the same as that now used with the present breech sight and is so retained in order to permit the use of either form of rear sight. The line of sight passes through the top front sight and the cross wire is not used.

When the wheels of the gun carriage are on the same level, these side sights can be used to give direction to the gun in the ordinary way before it is elevated by means of the pointing arc. When the trunnions are inclined, owing to the wheels not being on the same level, the gun on being elevated will shoot toward the side of the lower wheel. A deflection scale can be used to correct for this error and the gun sighted for direction as before.

CORRECTION IN RANGE TABLE FOR 3.2-INCH B. L. RIFLE.

Shell and shrapnel 13.5 pounds. Muzzle velocity 1,685 foot-seconds, due to the inclination of the trunnions.

Range.	Deflection, 1 division horizontal scale.	Correction for inclination of trunnions.	Range.	Deflection, 1 division horizontal scale.	Correction for inclination of trunnions.
Yards.	*Feet.*	*Divisions, horizontal scale.*	*Yards.*	*Feet.*	*Divisions, horizontal scale.*
500	3	$0.03 \times d^{\circ}$	2,500	15	$0.58 \times d^{\circ}$
600	3.6	$.05 \times d^{\circ}$	2,600	15.6	$.62 \times d^{\circ}$
700	4.2	$.07 \times d^{\circ}$	2,700	16.2	$.66 \times d^{\circ}$
800	4.8	$.09 \times d^{\circ}$	2,800	16.8	$.70 \times d^{\circ}$
900	5.4	$.11 \times d^{\circ}$	2,900	17.4	$.74 \times d^{\circ}$
1,000	6	$.13 \times d^{\circ}$	3,000	18	$.78 \times d^{\circ}$
1,100	6.6	$.15 \times d^{\circ}$	3,100	18.6	$.82 \times d^{\circ}$
1,200	7.2	$.17 \times d^{\circ}$	3,200	19.2	$.86 \times d^{\circ}$
1,300	7.8	$.19 \times d^{\circ}$	3,300	19.8	$.90 \times d^{\circ}$
1,400	8.4	$.22 \times d^{\circ}$	3,400	20.4	$.95 \times d^{\circ}$
1,500	9	$.25 \times d^{\circ}$	3,500	21	$1.00 \times d^{\circ}$
1,600	9.6	$.28 \times d^{\circ}$	3,600	21.6	$1.05 \times d^{\circ}$
1,700	10.2	$.31 \times d^{\circ}$	3,700	22.2	$1.10 \times d^{\circ}$
1,800	10.8	$.34 \times d^{\circ}$	3,800	22.8	$1.15 \times d^{\circ}$
1,900	11.4	$.37 \times d^{\circ}$	3,900	23.4	$1.20 \times d^{\circ}$
2,000	12	$.40 \times d^{\circ}$	4,000	24	$1.25 \times d^{\circ}$
2,100	12.6	$.43 \times d^{\circ}$	4,100	24.6	$1.30 \times d^{\circ}$
2,200	13.2	$.46 \times d^{\circ}$	4,200	25.2	$1.35 \times d^{\circ}$
2,300	13.8	$.50 \times d^{\circ}$	4,300	25.8	$1.40 \times d^{\circ}$
2,400	14.4	$.54 \times d^{\circ}$	4,400	26.4	$1.45 \times d^{\circ}$
			4,500	27	$1.50 \times d^{\circ}$

The following rule for this correction has been deduced by Capt. R. Birnie, Ordnance Department: The correction for deflection due to inclination of trunnions expressed in units

Digitized by Google

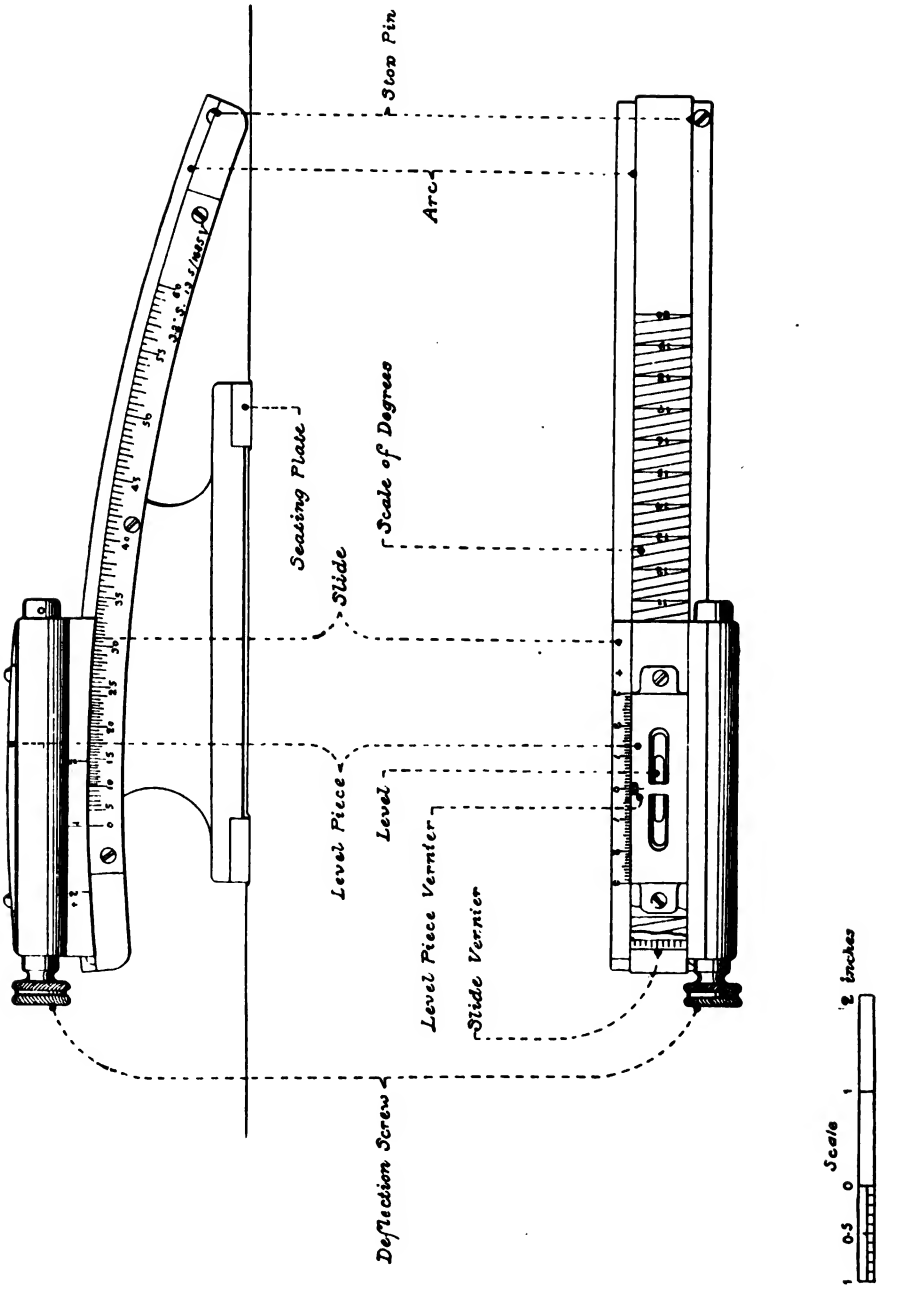

Fig. 92
Pointing Arc

Digitized by Google

Digitized by Google

of the deflection scale, is, at any range, equal to the product of the angle of elevation and the angle of inclination of trunnions, both expressed in degrees, into a constant multiplier. The rear sight must be moved toward the side of the higher wheel. When the divisions of the deflection scale are $\frac{1}{500}$ of the distance between sights this multiplier is 0.1523; and when the divisions of the scale are $\frac{1}{1000}$ the multiplier is twice as great, or 0.3046.

In order to make this rule applicable to ranges expressed in yards, the preceding table has been prepared.

In the table d represents the angle of inclination of the trunnions in degrees.

In using the table a close approximation will be attained if fractions of d are neglected and the angle observed used as a multiplier to the nearest even degree only. The difference in the trajectories of shell and shrapnel is so slight that the same correction will answer for both projectiles.

For ranges under 1,500 yards it will be necessary to apply the correction for inclinations of the trunnions of less than 4 degrees. Practically the necessity for this correction can ordinarily be avoided by selecting the ground for the carriage.

A disadvantage of this system of pointing in open firing as compared with the tangent or pendulum system, is that two processes instead of one are required—the first to point the gun, and the second to give it elevation. It is claimed, however, that in open firing an experienced artilleryman can give all requisite exactness in direction by simply glancing along the top line of metal of the gun. If this can be done when the gun is elevated for firing by the pointing arc, it renders unnecessary any consideration of the inclination of the trunnions.

SIGHTS FOR THE 7-INCH B. L. R. HOWITZER.

The novel feature about the sights for this piece is their adaptability to both forward and reverse laying.

Both sights are reversible, so that in sighting to the rear the front sight can be used as a rear sight while the rear sight becomes a front sight so far as the gunner is concerned.

THE REAR SIGHT.

The base is of bronze and is merely a bushing inserted in a hole drilled for it in the breech of the gun. When in place, it is secured by a set screw.

Through this bushing slides a vertical steel limb which is supported at any desired position by a bronze collar with a clamping screw. The base of the collar has two projections, which fit into recesses in the top of the bushing and thus correctly seat the sight. The sight should be removed from the piece before firing, and by means of the collar it can be again used after the discharge with its original adjustment, or it can be reset with a correction if necessary.

The vertical limb is graduated by means of horizontal lines in degrees and by diagonal lines to sixths of a degree. A steel gib beveled on its upper end forms a vernier, which, being divided into ten divisions, permits, in conjunction with the diagonal ten minute lines, of reading to minutes. The sight is graduated for 15 degrees elevation, numbered downward.

The upper end of the vertical limb carries a head of bronze. A horizontal deflection bar of steel slides in a groove in this head and is secured at any point by a clamp screw. The deflection bar is graduated from 0 to 110, with divisions that are $\frac{1}{10}$ of the distance between the sights, or .07 of an inch apart. On the upper half of the bar the reading is from right to left, and on the lower from left to right.

Digitized by Google

A reversible sighting leaf of bronze slides on the deflection bar and has one end fitted as a rear sight with notch and peephole, and the other as a front sight with point and cross wires. The cross wires are of steel ribbon, as used in the front sight for the field guns.

By sliding the leaf entirely off the bar it may be reversed and replaced. An improvement upon this method of reversing the sight is under consideration and will probably be adopted. The leaf is made with a pin projecting through the bar, around which works a clamp nut with knurled head. Upon releasing the clamp nut the leaf has sufficient play to admit of its being turned about the pin as an axis.

THE FRONT SIGHT.

The front sight consists of a base, seating pin, reversible sighting leaf and its clamp screw. The base is of bronze and is attached by four screws to the right rimbase of the gun over the axis of the trunnions. The sighting leaf is of the same general design as that

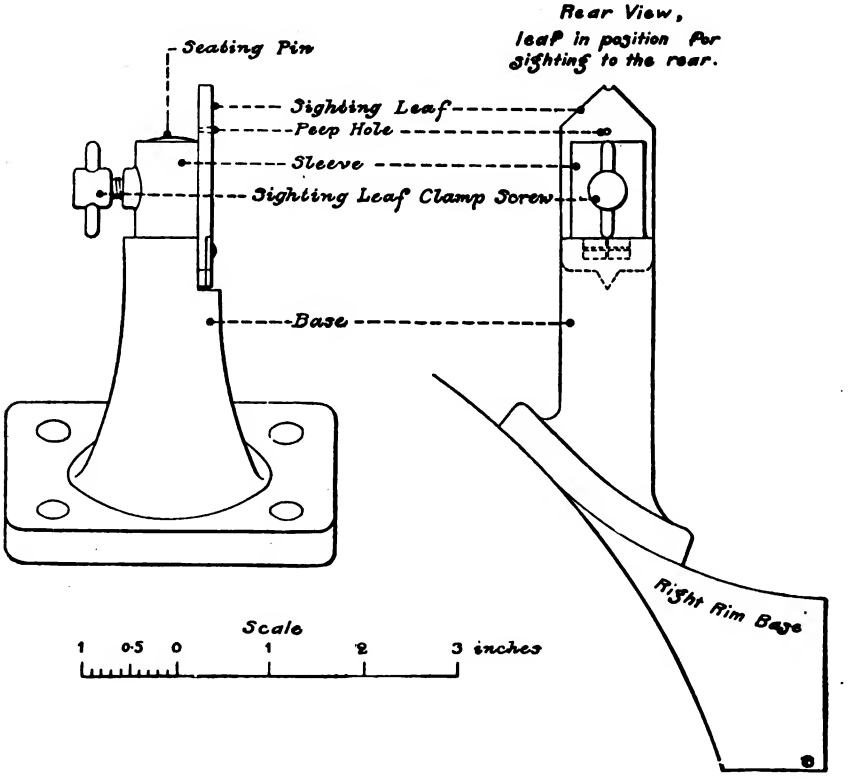

Fig. 94. Front Sight for 7-inch Breech-loading Rifle Howitzer.

of the rear sight. It is provided with a sleeve, which fits over the seating pin. The sleeve is fitted so that it may be put on the seating pin either end up. The sighting leaf is clamped in place with the point and cross wires up in sighting to the front, and with the notch and peephole in that position for reverse laying.

METHOD OF USE.

For forward laying, the notch of the rear sight is used in conjunction with the point of the front sight, the finer adjustment being effected by using the peephole and cross wires.

Digitized by Google

Fig. 93
Rear Sight for 7 inch B.L. Siege Howitzer

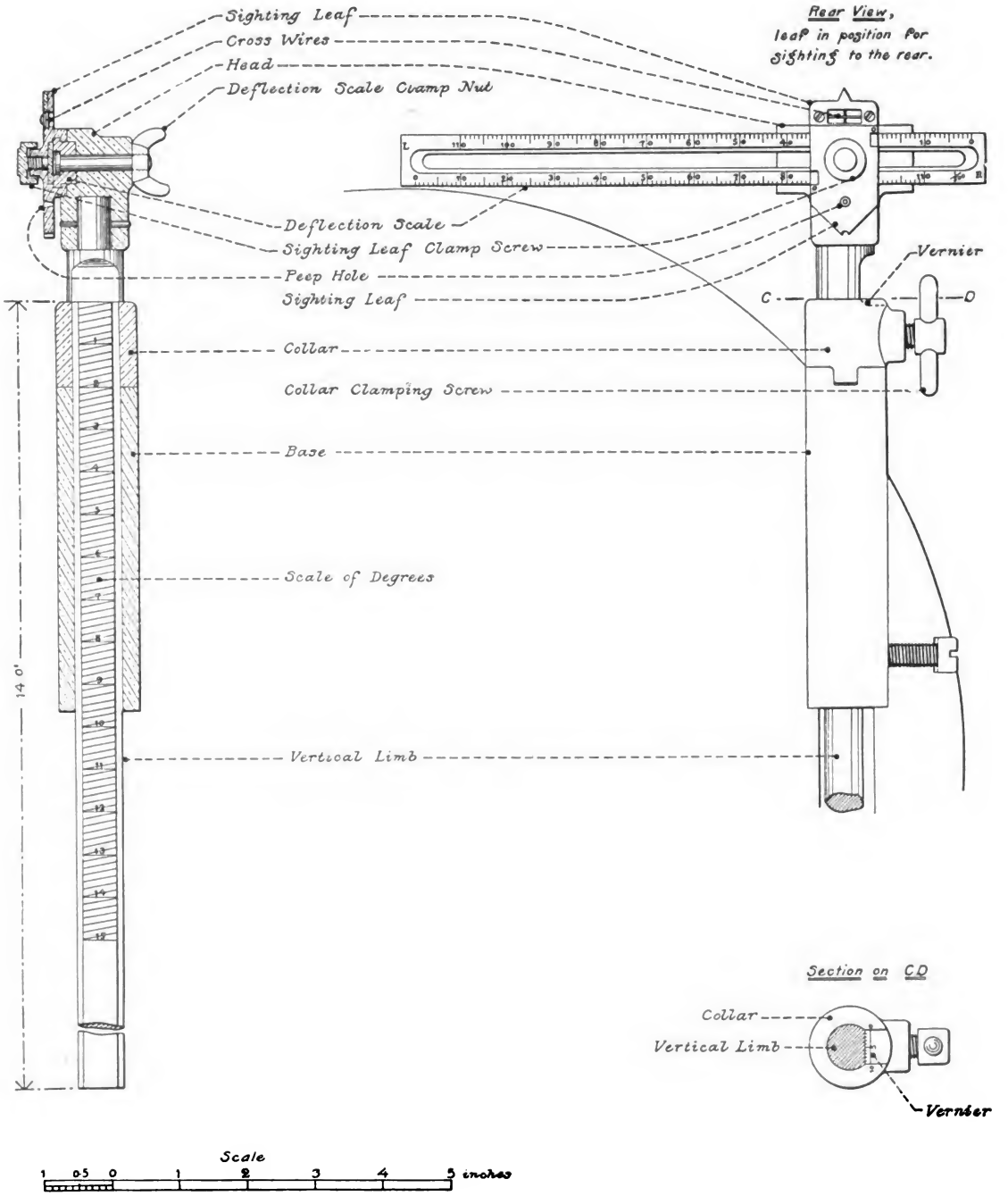

Digitized by Google

Digitized by Google

Correction for drift or wind is made by clamping the reversible leaf at any convenient division on the deflection bar, then moving the bar till the index marks on the head and leaf coincide; the clamping screw of the leaf may then be loosened, and any desired number of divisions may be taken to the right or left of the one chosen.

For reverse laying, the line of fire is established by any of the usual methods, and both sighting leaves are reversed, the notch of the trunnion sight being used in conjunction with the point of the tangent sight, or, if greater accuracy be required, the peep and cross wires are used. The howitzer is laid by quadrant or sighting arc, and an aiming point is selected to the rear of the platform. The deflection bar and reversible leaf are so adjusted as to bring into the same vertical plane the aiming point selected, the peephole of the trunnion sight and the cross wires of the tangent sight. These three points are then brought into line by elevating or depressing the tangent scale; the elevation taken on the tangent sight is not necessarily that at which the piece is laid. It may be found more convenient to establish the aiming point; in this case any convenient division may be selected on both vertical and horizontal limbs.

After the first round necessary corrections for deflection and elevation are made, the aiming point being used as above described, the quadrant being no longer necessary. Before firing the tangent sight is securely clamped at the proper divisions, and is then removed from the piece. After each round any required alteration in the amount of elevation or deflection is given on the tangent sight, and the howitzer, being run up, is laid on the aiming point without altering the positions of the sights. Chalk marks on the platform will be found very convenient for returning the piece to its original position.

For night firing, or in case of a dense fog, a luminous aiming point is required. For this purpose a bull's-eye lantern may be used, covering the lens with thin paper upon which a cross has been traced.

SIGHTS FOR THE 7-INCH B. L. R. MORTAR.

No sights have as yet been adopted for the 7-inch mortar, but there is a seat for the gunner's quadrant on its upper surface in rear of the trunnions.

SIGHTS FOR SEACOAST GUNS.

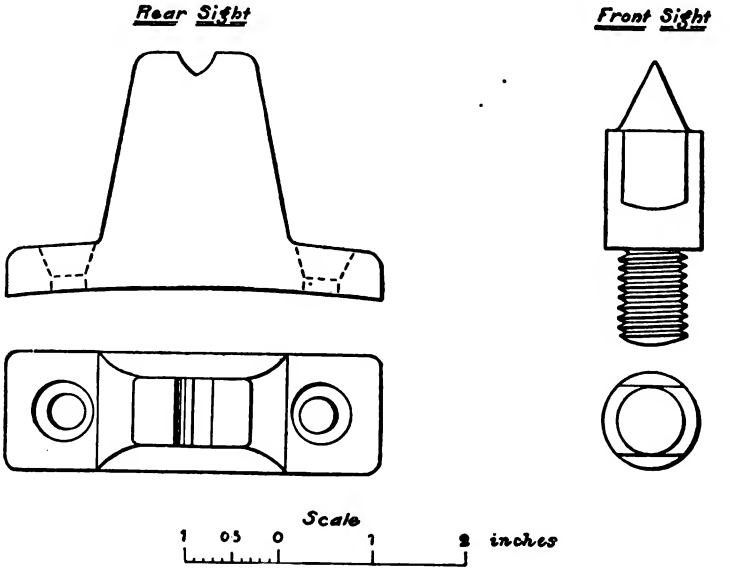

Fig. 95. Axial Sight for 10-inch Breech-loading Rifle.

Digitized by Google

There are two systems of sights made for the 8, 10, and 12 inch rifles, the axial sights, or those in the plane of the axis, and the side sights.

The axial sights consist of a simple notched rear sight without means of elevation or deflection, and a point front sight. They are used in proof firing, for very short range, or for laying the gun on a certain line of fire, using the quadrant or trunnion elevation indicator for elevation.

The side sights for the 8, 10, and 12 inch rifles are all built on the same general lines. The graduations on the tangent scales are necessarily different, and the proportions of the sights increase with the caliber of the guns.

FRONT SIGHTS (SIDE) FOR 8, 10, AND 12 INCH B. L. RIFLES.

These sights resemble those for field and siege guns very closely. They are made entirely of steel except the cross carrier, which is of brass. The body of this type of front

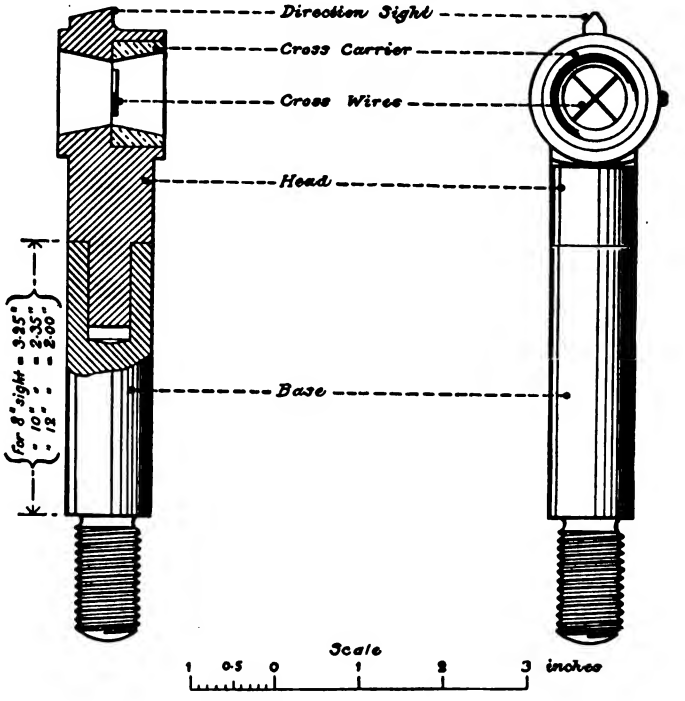

Fig. 96. Front Sights for 10-inch Breech-loading Rifle.

sight is made in two parts, the head fitting into the base, which is left with an excess of length, in order that the position of the cross wires may be accurately adjusted at the proper height by filing off the top surface of the base after it has been screwed in its seat.

REAR SIGHTS (SIDE) FOR 8, 10 AND 12 INCH B. L. RIFLES.

These sights are made of bronze and steel, and are composed of the following principal parts, and the necessary screws for assembling and securing the sights in place:

Base.
Vertical limb.
Worm.
Deflection scale.
Miter gear.
Deflection screw.
Elevating wheel and shaft.
Sighting leaf.
Vernier.

Digitized by Google

Fig. 97
Rear Sight (Side) for 10 inch B.L. Rifle

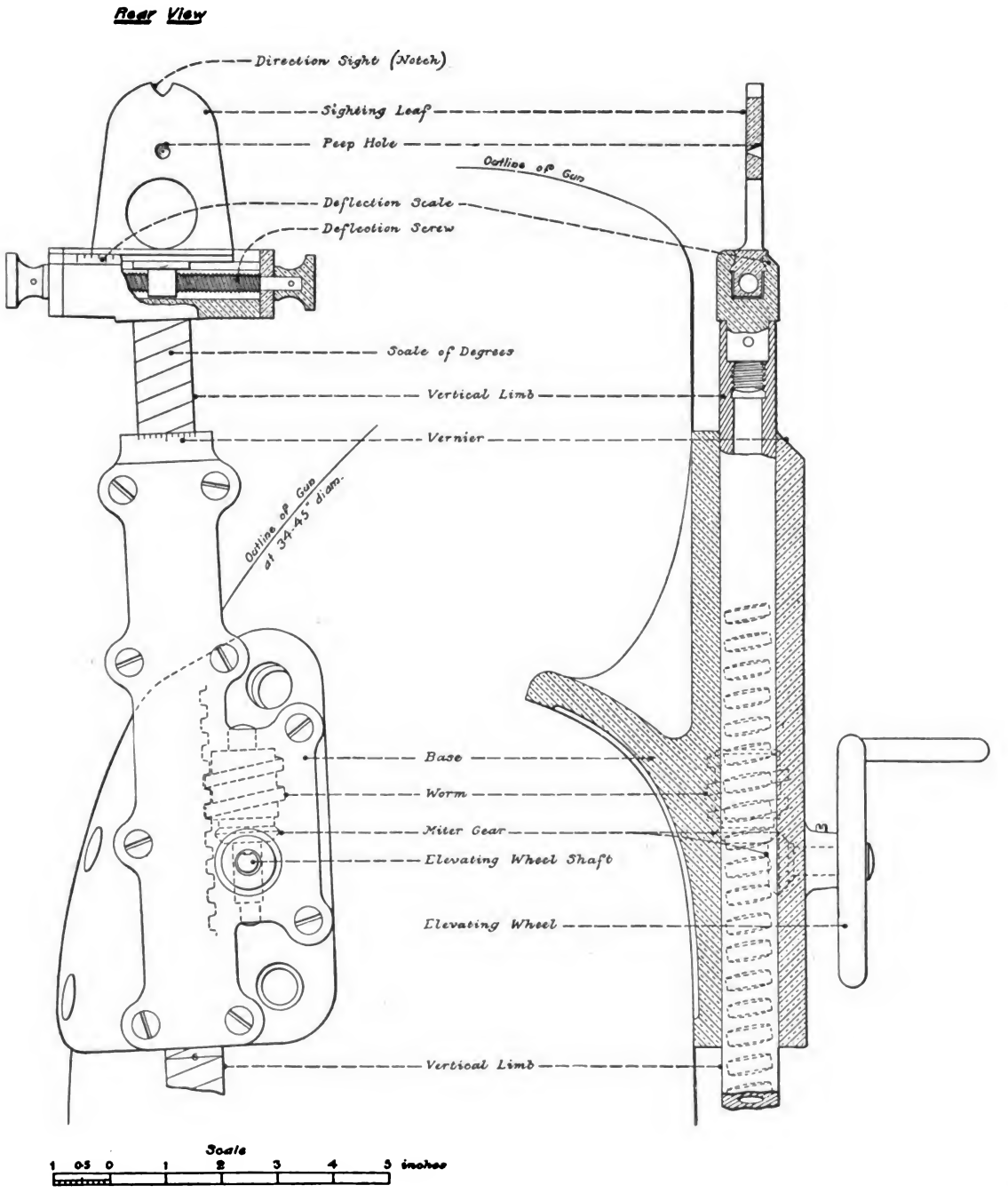

Digitized by Google

Digitized by Google

The base is made of bronze, and is secured to the rear of the last outside hoop of the gun on the left side by screws. It supports the vertical limb and the gearing that operates it.

The vertical limb is a square steel bar with a hole bored through it lengthwise to decrease its weight. It is graduated on its rear face. The least reading is 10 minutes, but by means of a vernier a reading to 1 minute can be made.

The 8-inch sight is graduated for 15 degrees of elevation, the 10-inch for 12, and the 12-inch for 10. The deflection bars are all graduated to thousandths of range.

For the 8-inch rifle the line of the so-called vertical limb is inclined 2 degrees and 30 minutes from the vertical as a correction for drift; for the 10-inch and 12-inch sights the inclinations are respectively 2 degrees and 45 minutes and 3 degrees.

The upper end of the vertical limb carries the sighting leaf and the deflection bar and screw. The sighting leaf has a notch for quick sighting, and a peephole for finer adjustment. The notch is used in conjunction with the triangular top of the front sight, and the peep with the cross wires. The sighting leaf is made lighter by the removal of the superfluous metal beneath the peep.

The deflection scale is of similar construction to those for the field and siege gun sights and has the same purpose. The sight leaf is moved to the right or left by turning the deflection screw, which has milled heads at both ends.

The vertical limb has cut on one side sections of a female screw. Elevation and depression are given by turning a handwheel which rotates gear wheels and a worm. The worm engages in the screw sections of the vertical limb, and raises or lowers it.

EXPERIMENTAL HORIZONTAL LIMB FOR SEACOAST RIFLE SIGHTS.

The horizontal sight limb shown in figure 98 is now undergoing trial.

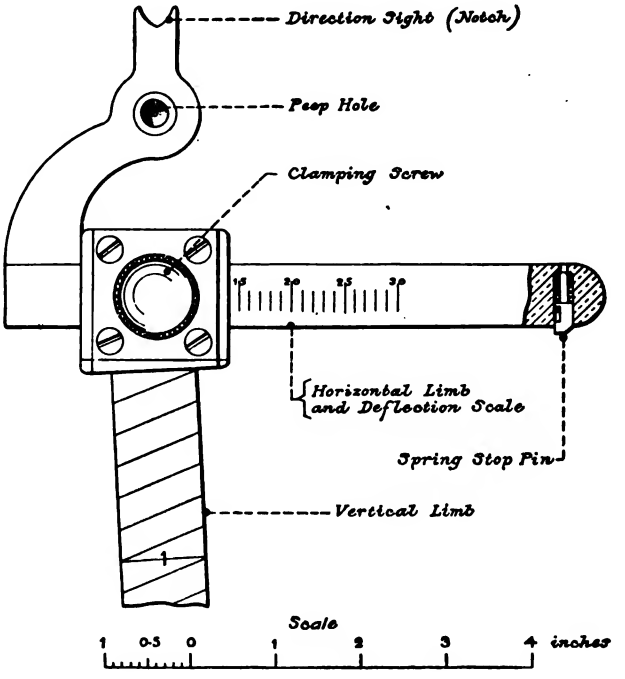

Fig. 98. Experimental Horizontal Limb for 10-inch Breech-loading Rifle Sights.

Digitized by Google

It consists of a deflection scale with a curved arm at one end projecting upward and carrying a peephole and a notch for a direction sight. The limb slides horizontally through the head of the vertical limb, and can be clamped at any point by a clamping screw. A reading, in the opposite direction from that shown in the illustration, can be obtained by pressing in the spring stop pin, removing the limb and inserting it from the other side. The limb is graduated on both sides.

This device will probably be adopted for the side sights of the 8, 10, and 12 inch breech-loading rifles.

Digitized by Google

INDEX.

SUBJECT.	PAGE.
Accles feed case for Gatling guns, description of	38
Ammunition chest for 3.2-inch limber, description of	118
Ammunition pack for Hotchkiss 2-pounder mountain gun, description of	73
Anvil and vise, method of carrying on forge and battery wagon	124
Archibald wheels	21
Arnold, Major I., commanding Watervliet Arsenal, acknowledgment of valuable assistance from	5
Axes and spades, arrangement of, on caisson of 3.2-inch rifle	120
Axle for gun carriage, general description of an	19
Axle arm, definition of	19
Axle arm, object of hollow of	20
Axle arm, object of lead of	20
Baker, Capt. Frank, compiler under special obligations for assistance, to	5
Bands, brow and end, definition of	21
Bar, splinter, definition of	24
Birnie, Capt. R., acknowledgment of valuable assistance from	5
Board of Ordnance and Fortification, acknowledgment of material obtained from reports of	5
Bolt, chin, definition of	22
Bolt, key, definition of	22
Bore of a cannon, definition and division of	15
Brake, object of	24
Brakes for 3.2-inch carriage, description of	109
Brakes, lever road, now used on 3.2-inch caisson	120
Breech block, method of removing when it can not be unlocked	165
Breech mechanism, action of slotted screw	18
Breech mechanism, slotted screw, general description	17
Breech mechanism, 3.2-inch rifle, action of	100
Breech mechanisms, classification of	17
Breech of a gun, definition of	14
Bruce feed case for Gatling guns, description of	38
Bruce feed case used with model 1881 Gatling gun	35
Bruce feed used on Gatling gun, model 1889	35
Bruff, Capt. L. L., acknowledgment of valuable assistance from	5
Buckets, water, method of carrying on 3.2-inch caisson	120
Buffington, Col. A. R., commanding Rock Island Arsenal, acknowledgment of valuable assistance from	5
Buffington-Crozier disappearing carriage for 8-inch B. L. rifle, description of	179
Buffington-Crozier disappearing carriage for 10-inch B. L. rifle, description of	189
Caisson and equipment, 3.2-inch rifle, weight of	123
Caisson, definition of	19
Caisson for 3.2-inch B. L. rifle, description of	119
Caisson, general description of	24
Caliber of a gun, definition	15
Canister, definition and use of	16
Canister for 3.2-inch rifle, description of	226
Cannon, advantages of built-up method of construction	13
Cannon, definition and classification of	13
Cap-squares, definition of	22
Carpenter's and wheelwright's chest, forge and battery wagon, contents of	124
Carriage and limber for Gatling guns, model 1883, description of Watervliet Arsenal	42
Carriage and limber for machine guns, model 1890, component parts of	44
Carriage, Barbette, description of, for 8-inch B L. rifle	174
Carriage, Barbette, for 10-inch B. L. rifle	189
Carriage, Barbette, for 12-inch B. L. rifle	197
Carriage, Buffington-Crozier disappearing, for 8-inch B. L. rifle, description of	179
Carriage, Buffington-Crozier disappearing, for 10-inch B. L. rifle, description of	189
Carriage, Buffington-Crozier, 8-inch, action of	180
Carriage, Buffington-Crozier, 8-inch, rapidity and field of fire of	183
Carriage, elevating mechanism for 12-inch Barbette	198
Carriage for Hotchkiss 12-pounder mountain gun, description of	76
Carriage for 3.2-inch B. L. rifle	105
Carriage for 3.6-inch B. L. mortar	135
Carriage for 5-inch B. L. rifle	143
Carriage for 5-inch B. L. rifle, changes proposed in	149
Carriage for 7-inch B. L. R. siege howitzer	155
Carriage for 7-inch howitzer, weight of	156
Carriage for 7-inch B. L. R. siege mortar	160
Carriage, Gordon disappearing, for 10-inch B. L. rifle	189
Carriage, gun lift, for 12-inch B. L. rifle	201
Carriage, minimum port casemate, principal features of	25

Digitized by Google

SUBJECT.	PAGE.
Carriage, shot hoist for 12-inch Barbette	201
Carriage, Watervliet Arsenal, for Gatling guns	42
Carriage, wooden, for Gatling guns, description of	41
Carriage, 8-inch Barbette, description of traversing gear	177
Carriage, 8-inch Barbette, elevating mechanism of	177
Carriage, 8-inch Barbette, nomenclature, dimensions, and weights	179
Carriage, 12-inch gun lift, hydraulic connections for	205
Carriages, artillery, classification of	19
Carriages, Barbette, object and classification of	25
Carriages, casemate, use and classification of	25
Carriages, construction of field, of wood and metal	19
Carriages, disappearing, use of	25
Carriages, flank defense, object of	25
Carriages for 3.6-inch B. L. rifle	128
Carriages for 10-inch B. L. rifle	189
Carriages for 12-inch B. L. rifle	197
Carriages, gun lift, object of	25
Carriages, seacoast, classification of	25
Carriages, siege, classification of	25
Carrier ring, definition of	18
Chain, lock, use of	23
Chase, definition of	15
Cheeks in wooden carriages, definition of	23
Chest, ammunition, description of	24
Chief of Ordnance, acknowledgment of material obtained from reports of	5
Cinchas for pack saddles for Hotchkiss 2-pounder mountain gun, description of	70
Colors, distinctive, for projectiles	231
Console, or tray, definition of	18
Crank, rotating, definition of	18
Crozier, Capt. W., acknowledgment of valuable assistance from	5
Density of loading defined	17
Density, sectional, of a projectile, defined	17
Dungan plunger used with Frankford Arsenal fuze for Hotchkiss 2-pounder gun	234
Dungan plunger with Flagler modification used with Frankford Arsenal base percussion fuze C	237
Elevating device for 3.2-inch carriage, description of	110
Elevation indicator for 8-inch rifle, description of	178
Emery disappearing carriage for 12-inch B. L. rifle, under contract	165
Emmensite to be used in deck-piercing projectiles	228
Farley, Lt.-Col. J. P., Commanding Frankford Arsenal, acknowledgment of valuable assistance from	5
Field cannon and carriages	93
Fillets of a cannon, definition of	15
Flagler, Gen. D. W., Chief of Ordnance, acknowledgment of valuable assistance from	5
Flagler, use of Dungan plunger as modified by General	237
Flagler, use of Dungan plunger in C fuze, as modified by General	237
Flasks of a metal carriage, definition of	21
Forge and battery wagon and equipment, weights of	127
Forge and battery wagon, contents of forge chest	124
Forge and battery wagon for 3.2-inch rifle, description of combined	123
Fork of a limber, definition of	24
Freyre gas check used in 3.6-inch mortar	132
Fuller, Lieut. L. M., compiler under special obligations for assistance to	5
Fuze, Frankford Arsenal base percussion A, model 1893	234
Fuze, Frankford Arsenal base percussion A, model 1893, modified	234
Fuze, Frankford Arsenal base percussion B, model 1894	235
Fuze, Frankford Arsenal base percussion C, model 1894	236
Fuze, Frankford Arsenal, combination, 28 seconds, model 1892	241
Fuze, point percussion, for Hotchkiss 2-pounder mountain gun	66
Fuze, Frankford Arsenal point percussion, 15 seconds	238
Fuze scale for shrapnel for 3.2-inch B. L. rifle	103
Fuzes, classification of	233
Fuzes, object and classification of	16
Fuzes, point, time and percussion, for Hotchkiss 12-pounder mountain gun	86
Gardner gun, carriage and mount for	53
Gardner gun, carriage, etc., weights of	56
Gardner gun, description of	48
Gardner gun, directions for dismounting	50
Gardner gun, limber for	55
Gardner gun, method of operating	50
Gardner gun, nomenclature of improved	56
Gardner gun, oscillating apparatus for	54
Gatling gun, cal. .45, 5-barrel, adjustment of lock system	37
Gatling gun, cal. .45, 5-barrel, description of	35
Gatling gun, cal. .45, 5-barrel, description of oscillator for	35
Gatling gun, cal. .45, 5-barrel, directions for taking apart and assembling	36
Gatling gun, cavalry cart for	43
Gatling Gun Co., acknowledgments to	5
Gatling gun, description of oscillator for	33
Gatling gun, 10-barrel, cal. .30, model 1893, adjustment of	31
Gatling gun, 10-barrel, cal. .30, model 1893, component parts of	32
Gatling gun, 10-barrel, cal. .30, model 1893, description	29
Gatling gun, 10-barrel, cal. .30, model 1893, description of positive feed for	37

Digitized by Google

SUBJECT.	PAGE.
Gatling gun, 10-barrel, cal. .30, model 1893, directions for taking apart and assembling	31
Gatling gun, 10-barrel, cal. .45, description of	33
Gatling gun, 10-barrel, cal. .45, changes from 1874 to 1893	34
Gatling gun, model 1875, changes from previous models	34
Gatling gun, model 1876, changes from previous models	34
Gatling gun, model 1877, changes from previous models	34
Gatling gun, model 1879, changes from previous models	34
Gatling gun, model 1881, Bruce feed case used with	35
Gatling gun, model 1881, changes from previous models	34
Gatling gun, model 1883, changes from previous models	33
Gatling gun, model 1883, component parts of carriage and limber	42
Gatling gun, model 1883, weights of carriage, limber, etc	42
Gatling gun, model 1889, changes from previous models	35
Gatling gun, model 1893, changed from previous models	35
Gatling guns, component parts of tripod for	40
Gatling guns, construction of limber for	42
Gatling guns, description of Accles feed case for	38
Gatling gun, description of Bruce feed case for	38
Gatling guns, description of tripod for	40
Gatling guns, description of feed apparatus for	37
Gatling guns, description of wooden carriage for	41
Gatling guns, general description	27
Gatling guns in the United States land service	40
Gatling guns, method of using Bruce feed case for	38
Gatling guns, model 1883, description of Watervliet Arsenal carriage and limber for	42
Gatling guns, mounting for	40
Gatling guns, precautions in the use of	39
Gatling guns, Watervliet Arsenal carriage for	42
Gibson, Capt. W. W., compiler under special obligations for assistance to	5
Gordon disappearing carriage for 10-inch B. L. rifle	189
Guards, wheel, definition of	22
Guide sectors, 3.2-inch rifle, description	94
Heath, Capt. F., commanding Sandy Hook Proving Ground, acknowledgment of valuable assistance from	5
Hinge pin, definition of	18
Hollow of axle arm, object of	20
Hook, pintle, object of	24
Hoops of built-up cannon, nomenclature of	14
Hotchkiss Ordnance Company, acknowledgments to	5
Hotchkiss 2-pounder mountain gun, accessories and equipment for	58
Hotchkiss 2-pounder mountain gun, ammunition for	65
Hotchkiss 2-pounder mountain gun, carriage for	58
Hotchkiss 2-pounder mountain gun, description of	67
Hotchkiss 2-pounder mountain gun, description of pack outfit for	69
Hotchkiss 2-pounder mountain gun, directions for cleaning and care of	69
Hotchkiss 2-pounder mountain gun, directions for dismounting breech mechanism	66
Hotchkiss 2-pounder mountain gun, firing table for	75
Hotchkiss 2-pounder mountain gun, measurements and weights of	74
Hotchkiss 2-pounder mountain gun, point percussion fuze for	66
Hotchkiss 12-pounder mountain gun, description of	75
Hotchkiss 12-pounder mountain gun, description of ammunition for	88
Hotchkiss 12-pounder mountain gun, description of carriage for	76
Hotchkiss 12-pounder mountain gun, description of limber for	76
Hotchkiss 12-pounder mountain gun, firing table for	89
Hotchkiss 12-pounder mountain gun, point, time, and percussion fuzes for	86
Hotchkiss 12-pounder mountain gun, weights, measurements, etc	88
Hounds of a limber, definition of	24
Howitzer, 7-inch B. L. R. siege, carriage for	155
Howitzer, 7-inch B. L. R. siege, description of	150
Howitzer, 7-inch B. L. R. siege, description of breech mechanism of	150
Howitzer, 7-inch B. L. R. siege, weights, dimensions, etc	155
Hydraulic buffer for 5-inch siege carriage, description of	144
Hydraulic connections for 12-inch gun-lift carriage	205
Jacket and hoop, definition of	14
Knapsacks of cannoneers to be carried on footboards of 3.2-inch carriage	119
Lanterns, method of carrying on 3.2-inch caisson	120
Latch, 3.2-inch rifle, description of	94
Latch groove, 3.2-inch rifle, description	94
Lazy tongs elevating device, 3-2-inch carriage	110
Lead of axle arm, object of	20
Limber, definition of	19
Limber for Hotchkiss 12-pounder mountain gun, description of	76
Limber for siege guns	149
Limber for 3.2-inch rifle, description of	112
Limber, general description of	24
Linch pins, definition and use of	11
Loading, density of, defined	17
Lunette, definition of	22

Digitized by Google

SUBJECT.	PAGE.
Machine guns adopted by the United States	27
Machine guns, carriage for, model 1890	44
Minimum port casemate carriage for 12-inch B L. rifle, tested	197
Morrison, Capt. C. C., Ordnance Department, pamphlet commenced by	5
Morrison, Capt. C. C., Ordnance Department, work on pamphlet done by	5
Mortar, field, mounting for	25
Mortar, 3.6-inch field, carriage for	135
Mortar, 3.6-inch B. L. field, description of	131
Mortar, 3.6-inch B. L. field, weights and dimensions of	132
Mortar, 7-inch B. L. R. siege, carriage for	160
Mortar, 7-inch B. L. R. siege, description of	156
Mortar, 7-inch B. L. R. siege, weights, dimensions, etc	160
Mortar, 12-inch B. L. rifle, description of carriage for	215
Mortar, 12-inch B. L. rifle, elevating apparatus for	215
Mortar, 12-inch B. L. rifle, loading apparatus for	221
Mortar, 12-inch B. L. rifle, nomenclature and bill of material for carriage for	222
Mortar, 12-inch B. L. rifle, cast iron hooped with steel, description of	213
Mortar, 12-inch B. L rifle, cast iron hooped with steel, provisional range table for	214
Mortar, 12-inch B. L. rifle, steel, model 1890, breech mechanism of	207
Mortar, 12-inch B. L. rifle, steel, model 1890, description of	207
Mortars, 12-inch B. L. rifle	207
Mortars, 12-inch B. L. rifle, weights, dimensions, etc	213
Mountain artillery, use of	57
Mules, care of, in packing	90
Murphy stop used on Gatling gun, model 1889	35
Muzzle of a cannon, definition of	15
Nave of a wheel, definition of	21
Obturator, 3.2-inch rifle, description of	99
Ordnance notes, acknowledgments for material obtained from	5
Oscillator for Gatling gun, description of	33
Oscillator for 5-barrel Gatling gun, cal. .45, description of	36
Pack outfit for Hotchkiss 2-pounder mountain gun, description of	73
Packing, notes on	90
Peck, Lieut. F. P., acknowledgment of valuable assistance from	5
Phipps, Major F. H., President Ordnance Board, acknowledgment of valuable assistance from	5
Pickaxes, shovels, etc., arrangement of, on 3-2-inch caisson	119
Plate, trail, definition of	22
Plates, ear, definition of	22
Plates, eye, definition of	23
Platform for 3.6-inch mortar	135
Pointing arc, description of	251
Pointing arc, method of using the	251
Pointing scale for 3.6-inch mortar	135
Pole for Hotchkiss 2-pounder mountain-gun carriage, description of	70
Pole for limbers	24
Pole for 3.2-inch limber, description of	117
Pole prop for 3.6-inch limber, description of	117
Powder chamber, location and shape of	15
Pratt & Whitney Company, acknowledgments to	5
Preponderance, definition of	15
Primers, classification of	16
Projectile hoist, 8-inch Barbette carriage	179
Projectile, travel of, defined	16
Projectiles, cast iron solid shot	228
Projectiles, common shell for 12-inch mortar	228
Projectiles, deck piercing, for 12-inch mortar	228
Projectiles, classification of	16
Projectiles, distinctive colors of	231
Projectiles for seacoast cannon	227
Projectiles for siege cannon	227
Projectiles for 3.2-inch rifle, classification of	229
Projectiles for 3.6-inch rifle and 3.6-inch mortar, description of	227
Projectiles, forged steel shot	228
Quadrant, description of gunner's	215
Quadrant, gunner's, demonstration of principle of	249
Quadrant, gunner's, method of use	250
Range table for Hotchkiss 2-pounder mountain gun	75
Range table for Hotchkiss 12-pounder mountain gun	89
Range table for 3.2-inch shell	101
Range table for 3.2-inch shrapnel	102
Range table, provisional, for 12-inch B. L. R. mortar, cast iron, steel hooped	214
Reilly, Maj. J. W., commanding Watertown Arsenal, acknowledgment of valuable assistance from	5
Reinforce, definition of term breech	14
Rifle, 3.2-inch B. L., caisson for, description of	119
Rifle, 3.2-inch B L., carriage for	105
Rifle, 3.2-inch B. L., description of	93
Rifle, 3.2-inch B. L., description of breech mechanism for	93
Rifle, 3.2-inch B. L., limber for	113
Rifle, 3.2-inch, range table for, with common shell	101
Rifle, 3.2-inch B. L., range table for, with shrapnel	101
Rifle, 3.2-inch B. L., weights, dimensions, etc., of	100
Rifle, 3.2-inch B. L., weights of gun, carriage, etc	119
Rifle, 3.6-inch B. L., use of	127
Rifle, 3.6-inch B. L., breech mechanism of	127
Rifle, 3.6-inch B. L., carriages for	128
Rifle, 3.6-inch B. L., weights, dimensions, etc., of	128
Rifle, 5-inch B. L., carriage for	143

Digitized by Google

SUBJECT.	PAGE.
Rifle, 5-inch B. L., description of	139
Rifle, 5-inch B. L., vent cover for	149
Rifle, 5-inch B. L., weights, dimensions, etc., of	140
Rifle, 8-inch B. L., action of breech mechanism of	165
Rifle, 8-inch B. L., classification of carriages for	174
Rifle, 8-inch B. L., description of	165
Rifle, 8-inch B. L., description of breech mechanism of	165
Rifle, 8-inch B. L., description of Barbette carriage for	174
Rifle, 8-inch B. L., description of Buffington-Crozier disappearing carriage for	179
Rifle, 8-inch B. L., weights, dimensions, etc., of	178
Rifle, 10-inch B. L., Barbette carriage for	189
Rifle, 10-inch B. L., Buffington-Crozier carriage for	189
Rifle, 10-inch B. L., carriages for	189
Rifle, 10-inch B. L., description of modified Gordon disappearing carriage for	189
Rifle, 10-inch B. L., Gordon disappearing carriage for	189
Rifle, 10-inch B. L., model 1888, breech mechanism of	185
Rifle, 10-inch B. L., model 1888, description of	183
Rifle, 10-inch B. L., modifications of model 1888	184
Rifle, 10-inch B. L., weights, dimensions, etc., of	184
Rifle, 12-inch B. L., Barbette carriage for	197
Rifle, 12-inch B. L., carriages for	197
Rifle, 12-inch B. L., gun-lift carriage for	201
Rifle, 12-inch B. L., model 1888, description of	195
Rifle, 12-inch B. L., model 1892, description of	195
Rifles, 12-inch B. L., weights and dimensions of	196
Rifling, definition of	15
Rim bases, definition of	15
Rings, "D", definition of	23
Rings, pointing, definition of	22
Roller, translating, definition of	18
Ruggles, Lieut. C. L'H., compiler under special obligations for assistance, to	5
Saddler's chest, forge, and battery wagon, contents of	127
Screw box, definition of	18
Seacoast cannon, classification of	165
Shaler, Capt. C., acknowledgment of valuable assistance from	5
Shell, definition of and use of	16
Shell for 3.2-inch rifle, description of	223
Shield for machine gun carriage, model 1890	44
Shot chamber, location and shape of	15
Shot, definition and use of	16
Shovels, pickaxes, etc., arrangement of on 3.2-inch caisson	119
Shrapnel, definition and use	16
Shrapnel, electrically welded, for 3.2-inch rifle, description of	225
Shrapnel, electrically welded, for 3.2-inch rifle, weights and dimensions of	225
Shrapnel for 3.2-inch rifle, B. L., fuze scale for	103
Shrapnel for 3.2-inch B. L. rifle, rule for height of burst of	103
Shrapnel, Frankford Arsenal, for 3.2-inch rifle, description of	224
Shrapnel, Frankford Arsenal, for 3.2-inch rifle, weights and dimensions of	224
Siege cannon and carriages, classification of	139
Siege guns, description of limber for	149
Sights for 7-inch B. L. rifle howitzer, description of reversible leaf for	255
Sight, front, for 3.2-inch rifle	245
Sight, front, for 7-inch B. L. rifle howitzer	256
Sight, front (side), for seacoast rifles	260
Sight limb, experimental horizontal, for seacoast rifles	263
Sight, rear, for 3.2-inch rifle	245
Sight, rear, for 7-inch B. L. R. howitzer	255
Sight, rear (side), for seacoast rifles	260
Sights, axial, for seacoast guns, description	260
Sights for field and siege guns	244
Sights for Hotchkiss 2-pounder mountain gun	243
Sights for Hotchkiss 12-pounder mountain gun	243
Sights for 3.6-inch B. L. mortar	246
Sights for 3.6-inch and 5-inch B. L. rifles	246
Sights for 7-inch B. L. R. howitzer, method of use	256
Sights for 7-inch B. L. R. mortar	259
Sights for seacoast guns	259
Smith, Capt. C. S., acknowledgment of valuable assistance from	5
Spokes of a wheel, definition of	20
Stop groove, 3.2-inch rifle, description	94
Tangential strength of a cannon, definition of	14
Taylor, Capt. D. M., acknowledgment of valuable assistance from	5
Tension, explanation of principle of initial	14
Throttling bars for 12-inch gun-lift carriage	202
Tire of a wheel, definition of	20
Toggle, definition of	23
Tompkins, C. H. jr., draftsman, compiler indebted to, for careful work, etc	6
Translating roller for 8-inch B. L. rifle, description of	165
Transoms, definition of	22
Tray, or console, definition of	18
Truck for 12-inch mortar projectiles	222
Trunnion plates, definition of	22
Trunnions, definition of	15
Tube of a cannon, definition of	14
Turnbuckle, definition of	23
Velocity, muzzle, definition of	17
Vent cover, object of	18
Vents, radial and axial, definition and use of	17
Vents, radial and axial, 3.2-inch rifle, description of	99

Digitized by Google

SUBJECT.	PAGE.
Wagon, combined forge and battery, general description of	25
Wagon, combined forge and battery, use of	19
Washers, definition and use of	20
Wheeler, Lieut. C B., acknowledgment of valuable assistance from	5
Wheels, Archibald, description of	21
Wheels for gun carriages, general description of	20

Digitized by Google

Digitized by Google

Digitized by Google

Digitized by Google

Digitized by Google

Digitized by Google

Digitized by Google

Stanford University Libraries
3 6105 122 886 455

Digitized by Google

Digitized by Google